High Accuracy Compact Linear Motion System Solutions

GUIDE BOOK

Ball screw technology provides the answer

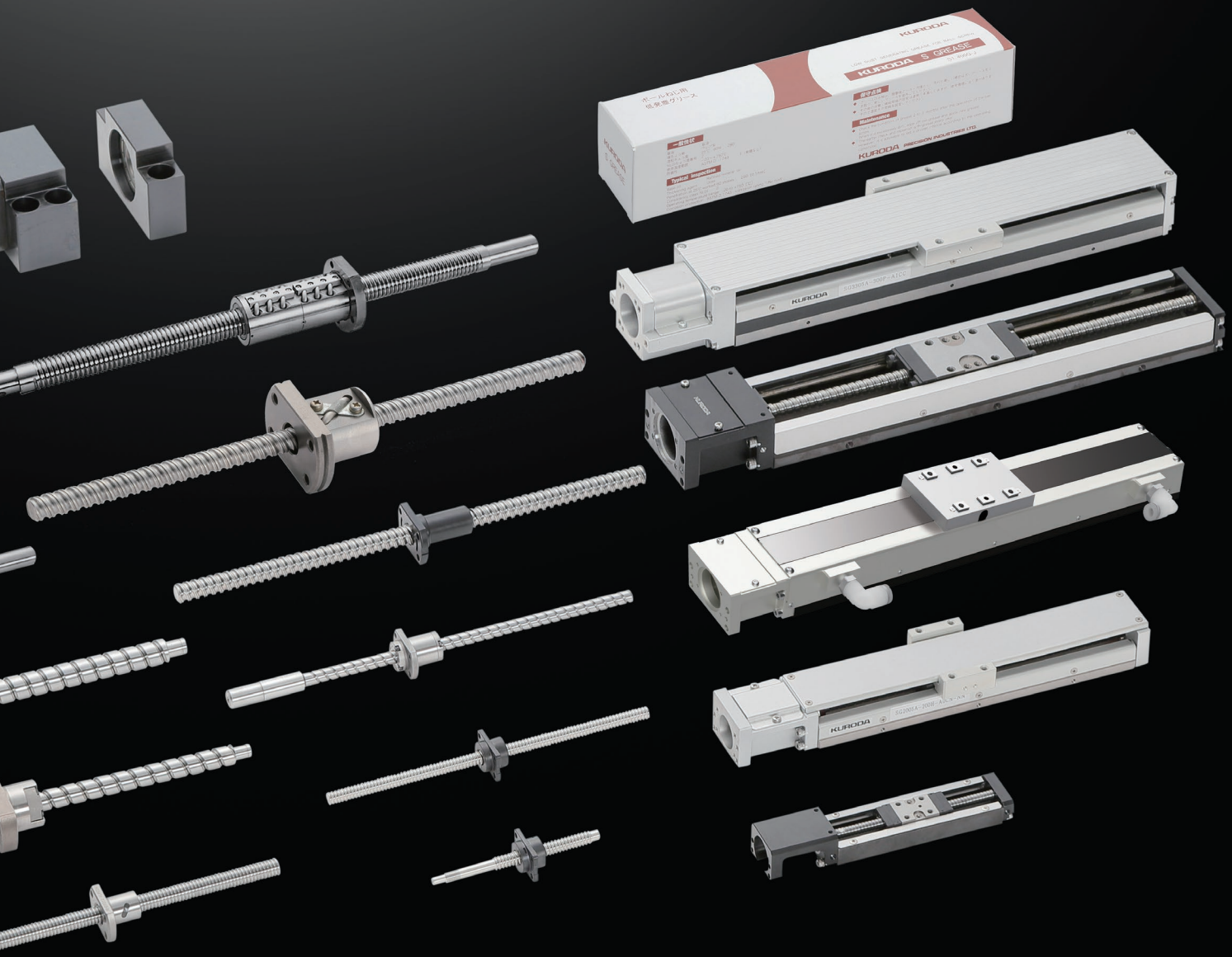

KURODA
JENATEC

KURODA

Supporting the advancement of industry all over the world through precision technologies

Based on our P&P (precision and productivity) business philosophy, and in accordance with our "Challenge & Create" principles of conduct ("Always taking on new challenges and creating new value"), KURODA aims to keep evolving constantly.

Our knowledge of precision and our unique technologies have been developed over more than 90 years of experience

KURODA was founded as a gauge manufacturer, and ever since has been devoted to "precision." The technologies we have developed and knowledge we have gained through this devotion have made previously impossible manufacturing a reality and are used in a wide range of devices that truly symbolize the modern era.

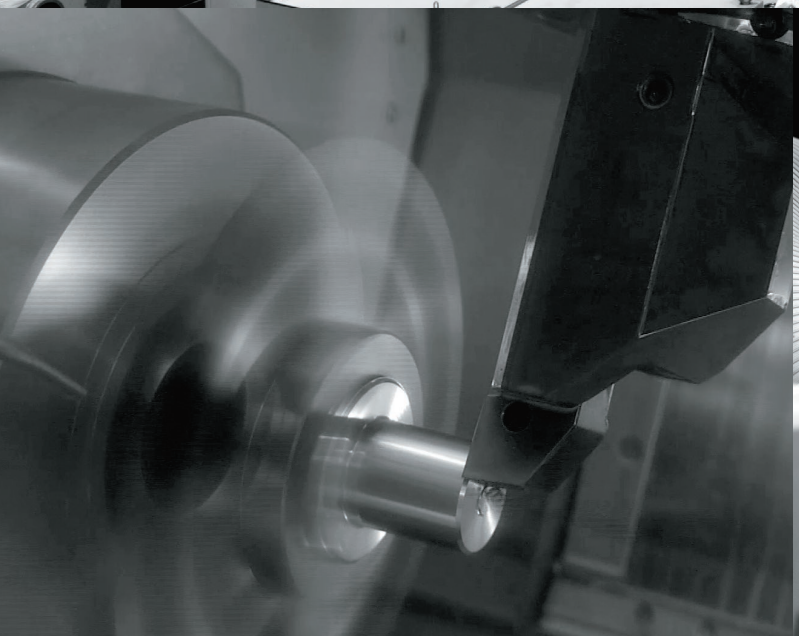

We aim to meet the needs of each industry and become the world's top linear motion drive system manufacturer

Drive systems are crucial components for supporting the precision operation of machinery.

KURODA leverages the mature precision technologies we have developed since our founding together with our worldwide network to provide one-stop service for precision ground ball screws and other drive system products, from design to production, sales, and after-sales service.

We aim to meet the needs of each industry with our mature precision technologies and become the world's top linear motion drive system manufacturer.

Precision linear motion drive systems bring machinery alive

High quality based on thread gauge technology

KURODA got its start with thread gauge technology, which allows us to provide a wide range of products including ultra-high precision ball screws, ultra-high lead ball screws, rolled ball screws and more.
Our production system achieves high accuracy and high efficiency thanks to our independent R&D and production facilities. We meet a range of needs—including improved positioning accuracy, high-speed operation, and reduced noise—with reliable quality and short lead times.

High-precision products and short lead times

The Kazusa Akademia Plant is our state-of-the-art plant for manufacturing drive system products. It provides true one-stop service for ball screw and ball screw actuator products from design to machining, assembly, quality inspection, and even distribution management.
This helps keep lead times short for high-precision products and mass-produced products alike.

Offering "Made in Kazusa" quality for all our products

Main plant

Kazusa Akademia Plant (Chiba)

In order to manufacture high-precision ball screws, we not only carefully manage the temperature and humidity in the plant's large production areas, but also use employ anti-vibration architecture and technology to prevent vibration. The plant is equipped with a full range of high accuracy thread grinders made by KURODA, measurement devices, and other equipment, while our unique production system allows this dedicated ball screw plant to achieve a high level of machining accuracy down to the micron level.

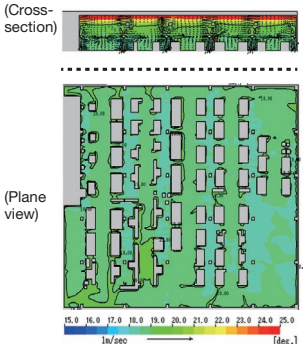

Thread grinding floor (partial) temperature simulation

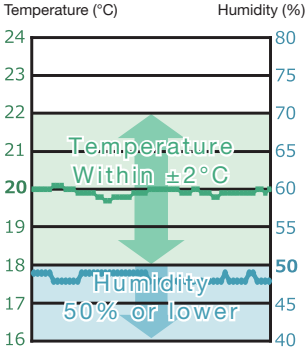

Thread grinding floor temperature/ humidity data (actual values)

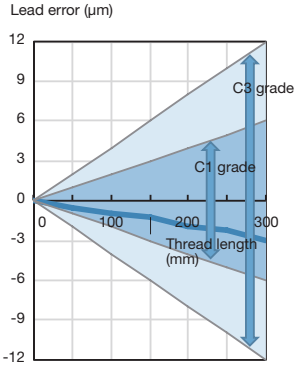

Cumulative representative lead accuracy (standards and measurement examples)

Inspection/measurement instruments

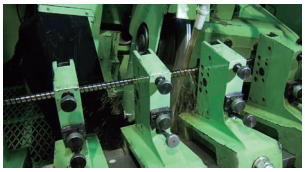

KURODA-made high accuracy thread grinder

INDEX

Our Products

Lineup

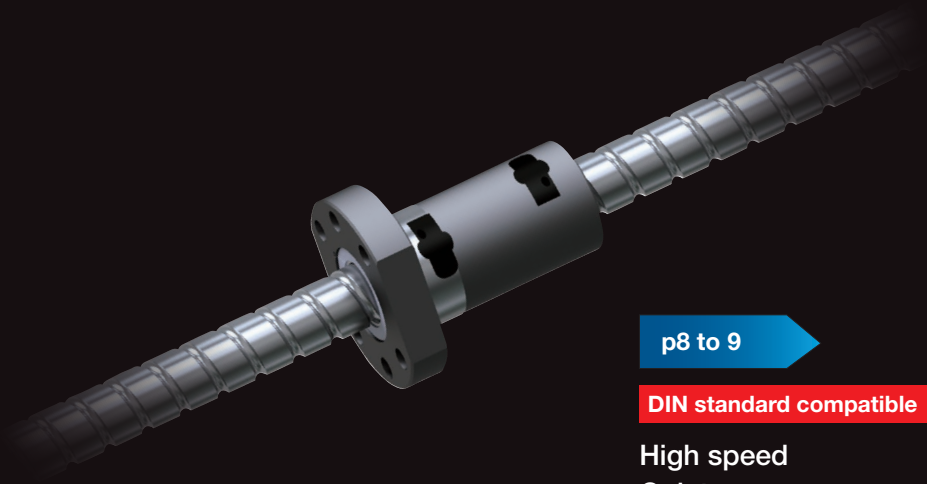

p8 to 9

DIN standard compatible

High speed
Quiet
Compact

Series	Accuracy grade
AD Series	C7
AH Series	C5

NEW

p10 to 11

Open/close gripping motions achieved with a single actuator

Series
Bidirectional Actuator SE Series
Bidirectional Actuator SG Series

NEW

p12 to 13

Clean Actuator

Series	Accuracy grade
SC Series	H grade U grade W grade

p16(C7·C5)
p19(C3)

Wide variety

Series	Accuracy grade
GE Series	C7
GG Series	C5
GP Series	C3

p17

High rotational speed
Quiet

Series	Accuracy grade
FE Series	C7
FG Series	C5

p18

For high-speed transport

Series	Accuracy grade
HG Series	C5

p19

Compact
For precision positioning

Series	Accuracy grade
DP Series	C3

p20 to 21

For transport
Wide variety

Series	Accuracy grade
GY Series	C10
GW Series	C7

p22

Order Made
JIS standard compliant

Series	Accuracy grade
GR Series	C0 to C10
DR Series	
FR Series	

p24 to 25

Actuator
For precision positioning

Series	Accuracy grade
SG Series	P grade H grade

p24 to 25

Actuator
For transport

Series	Accuracy grade
SE Series	H grade U grade W grade

p24 to 25

Actuator
Fully covered type

Series	Accuracy grade
SC Series	H grade U grade W grade

DIN standard compatible

Side deflector ball screw
AD/AH Series

High-speed, quiet, compact

3 key requirements all achieved in one balanced solution!

High speed

Designed to meet the needs of recent developments in automation as well as applications with strict takt time requirements, AD/AH Series Side Deflector Ball Screws offer greatly increased maximum rotational speeds and DN values. This high speed capability keeps in step with improvements in high performance motors.

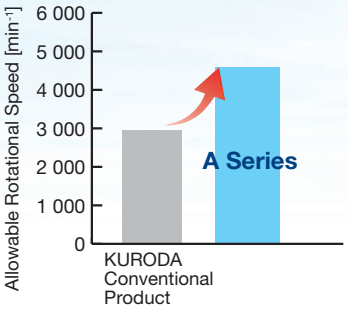

*Excluding some sizes

Quiet

Sound pressure has been reduced up to 6dB when compared to conventional tube recirculation method ball screws. Additionally, the AD/ AH Series design greatly reduces high frequency sound, which provides a pleasing improvement in sonic performance.

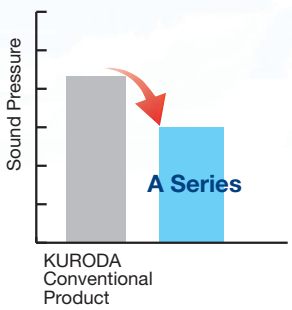

*Excluding some sizes

Compact

Reduction of the outer diameter of the nut contributes to the space efficiency of equipment. Alternatively, by replacing conventional products with an A-Series ballscrew with the same nut body size, the load rating can be increased.

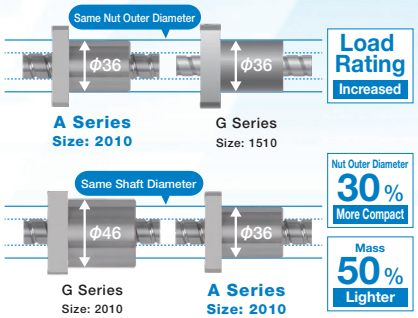

*Figures are concept illustrations only

Specifications/Shapes/Dimensions

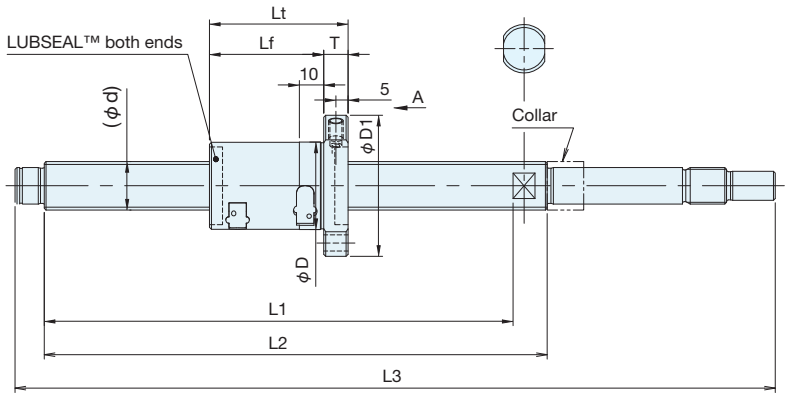

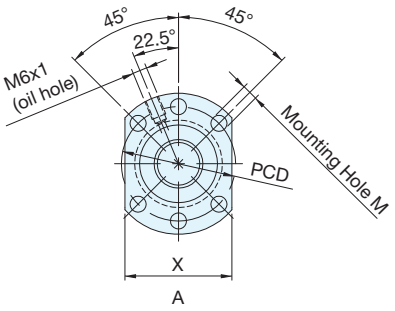

[Unit: mm]

Model Number	Screw Shaft Nominal Diameter	Lead L	Basic Dynamic Load Rating C [N]	Basic Static Load Rating C_0 [N]	Thread Length L1	Nut							
						Nut Diameter ϕ D	Total Nut Length Lt	Nut Body Length Lf	Nut Flange Section				
									Thickness T	Dimension X	Dimension ϕ D1	Mounting PCD	Mounting Hole M
AD16054S-HSSR	16	5	7 600	12 000	Contact us for details	28	47	37	10	40	48	38	5.5 drilled
AD16103S-HSSR		10	5 700	8 700			57	47					
AD16162S-HSSR		16	3 800	5 500			58	48					
AD16202S-HSSR		20	3 700	5 500			66	56					
AD20054S-HSSR	20	5	10 400	18 500		36	50	40	10	44	58	47	6.6 drilled
AD20103S-HSSR		10	7 800	13 400			57	47					
AD20202S-HSSR		20	5 100	8 500			66	56					
AD25054S-HSSR	25	5	11 400	23 100		40	47	37	10	48	62	51	6.6 drilled
AD25103S-HSSR		10	8 700	16 900			57	47					
AD25252S-HSSR		25	5 700	10 600			76	66					

Model Number	Screw Shaft Nominal Diameter	Lead L	Basic Dynamic Load Rating C [N]	Basic Static Load Rating C_0 [N]	Thread Length L1	Nut							
						Nut Diameter ϕ D	Total Nut Length Lt	Nut Body Length Lf	Nut Flange Section				
									Thickness T	Dimension X	Dimension ϕ D1	Mounting PCD	Mounting Hole M
AH16054S-HSSR	16	5	8 400	13 300	Contact us for details	28	47	37	10	40	48	38	5.5 drilled
AH16103S-HSSR		10	6 300	9 700			57	47					
AH16162S-HSSR		16	4 200	6 100			58	48					
AH16202S-HSSR		20	4 100	6 100			66	56					
AH20054S-HSSR	20	5	11 500	20 500		36	50	40	10	44	58	47	6.6 drilled
AH20103S-HSSR		10	8 700	14 900			57	47					
AH20202S-HSSR		20	5 700	9 400			66	56					
AH25054S-HSSR	25	5	12 700	25 700		40	47	37	10	48	62	51	6.6 drilled
AH25103S-HSSR		10	9 700	18 800			57	47					
AH25252S-HSSR		25	6 300	11 800			76	66					

LUBSEAL™ (Included)

The “LUBSEAL” is a lubrication unit that is fitted in contact with the shaft thread and supplies a proper amount of lubricant. Designed to maximize ball screw performance without sacrificing shaft length, “LUBSEAL” lubrication units prolong the period of maintenance-free operation with no loss in range of motion. This standard feature of AD/AH ball screws is ideal for semiconductor and LCD manufacturing and inspection equipment, food manufacturing equipment, medical equipment, machine tools, and automobile production equipment.

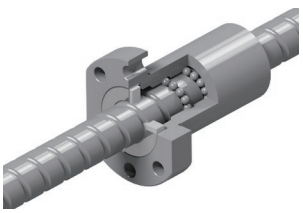

Guide to Model Numbers

AD 20 05 4 S - H S S R - 1460 X 1360 - C7 H
(1) (2) (3) (4) (5) (6) (7) (8) (9) (10) (11) (12) (13)

(1) Model number
(2) Shaft Diameter
(3) Lead
(4) Number of Circuits
(5) Nut Type
(6) Flange Type
(7) Ball Re-circulation System
(8) Wiper
(9) Thread Direction
(10) Overall Screw Shaft Length
(11) Thread Length
(12) Accuracy Grade
(13) Axial Clearance

NEW

Open/close gripping motions achieved with a single actuator

Bidirectional Actuator

A single-axis unit that combines a single ball screw and linear guidance system into a compact unit. The left- and right-hand thread ball screws are integrated into a single unit for open/close clamping.
With the slide block designed to fit within the U-guide rail, the actuator realizes a low profile.
Compared to conventional table mechanisms, space reduction is greatly improved.
Providing high precision and high rigidity, SE/SG Series actuators are particularly suitable for applications that require precise positioning.

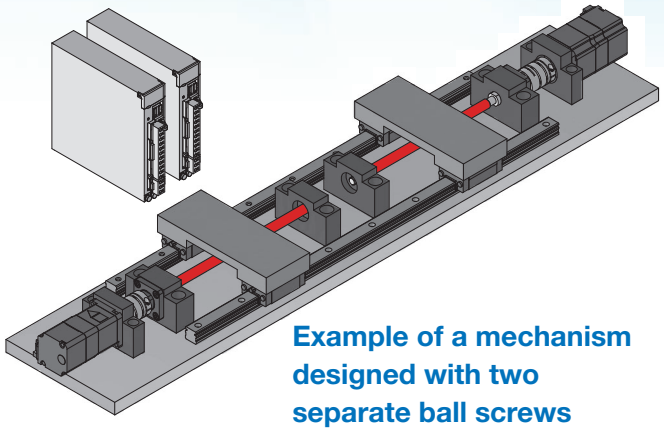

Example of a mechanism designed with two separate ball screws

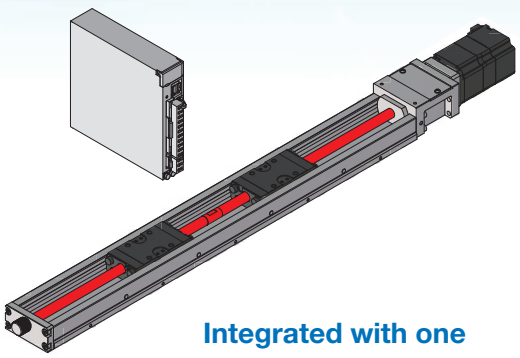

Integrated with one bidirectional actuator

Specifications

	Model No.	Stroke [mm]	Repeated positioning accuracy [mm]	Motor capacity [W]	Gripping force [N]	◎: Standard product ●: Made-to-order product
SE	SE1501B-150B-****-*S	30	±0.010	10	20	◎
				20	20	
				30	20	
	SE1502B-150B-****-*S			10	25	◎
				20	40	
				30	40	
	SE2302B-250B-****-*S	45		50	126	◎
				100	137	
	SE2305B-250B-****-*S			50	50	◎
				100	101	
	SE2305B-300B-****-*S	70		50	50	◎
				100	101	
	SE3004B-400B-****-*S	100		50	60	●
				100	120	
				200	253	
	SE3005B-400B-****-*S			50	50	◎
				100	101	
				200	202	
	SE3010B-400B-****-*S			50	25	◎
				100	50	
				200	101	
	SE4510B-540B-****-*S	130		50	25	●
				100	50	
				200	101	
SG	SG2602B-300B-****-*S	70	±0.005	50	126	◎
				100	137	
	SG2605B-300B-****-*S			50	50	◎
				100	101	
	SG3305B-400B-****-*S	100		50	50	◎
				100	101	
				200	202	
	SG3310B-400B-****-*S			50	25	◎
				100	50	
				200	101	
	SG4610B-540B-****-*S	130		50	25	●
				100	50	
				200	101	

- The gripping force is a reference value from the pushing force from the rated torque of the typical motor capacity applied to the actuator, or from the maximum axial load that affects the ball screw.
- The gripping force may vary depending on the transport mass, speed, material, and installation conditions. Please set the operating conditions appropriately.
- If the force exceeds the value indicated here, malfunction or damage to the actuator may occur.

Application Examples

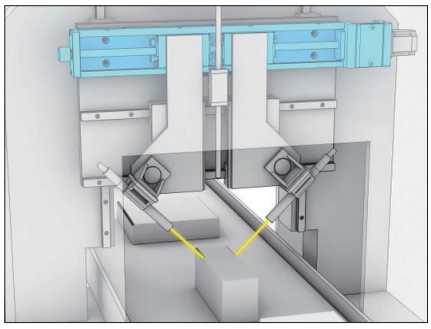

Workpiece chamfering machine

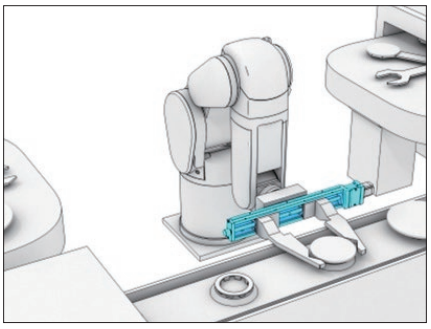

Robot hand

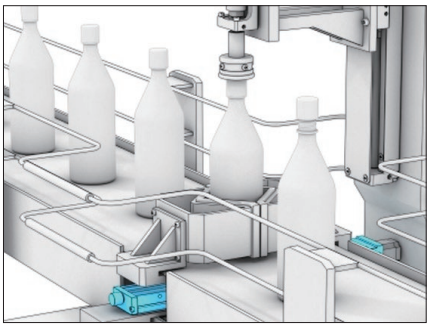

Centering of workpiece

Model Number Interpretation Key

SE15 01 B - 150 B - A0 N N - N S - _
(1) (2) (3) (4) (5) (6) (7) (8) (9) (10) (11)

(1) Model No.
(2) Lead
(3) Slide block
(4) Guide rail Length
(5) Performance sign
(6) Motor bracket configuration
(7) Type of cover
(8) Sensor
(9) Surface treatment
(10) Grease
(11) Dowel pin hole

NEW

Patented

Clean Actuator
Cleanroom Class 3 (ISO 14644-1) Compatible

SC23/SC30/SC45

KURODA`s ballscrew actuators integrate a ball screw and a guide rail into a single axis module. Designed to have the slide block set within the U-guide rail, these actuators achieve a low-profile design, offering a space efficient alternative to conventional table-type assemblies. Despite their compact structure, the inclusion of a single piece U-guide rail component contributes to high rigidity performance against bending moment and deflection, allowing them to be used in configurations that call for single end support. Additionally, all of KURODA`s linear motion elements incorporate a gothic-arched, 4 points-contact structure for improved rigidity and precision.

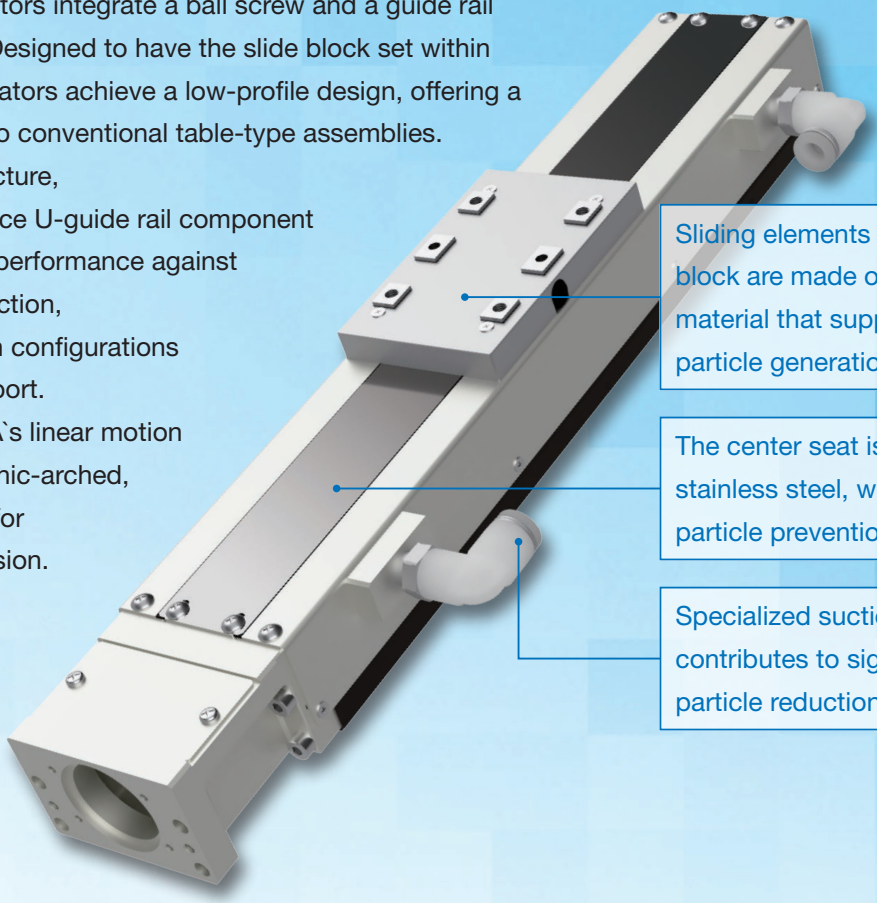

Sliding elements of the slide block are made of a low-wear material that suppresses particle generation

The center seat is made of stainless steel, with improved particle prevention properties

Specialized suction port contributes to significant particle reduction

Clears Cleanroom Class 3 (ISO 14644-1) Requirements

Measurement Test Conditions

Air inside the ball screw actuator was sucked from the SC suction port. The lower section of the measurement chamber was completely sealed to prevent air leakage. 1 CF of air was suctioned and the number of 0.1 µm particles was measured.

*Cleanliness Class 3 corresponds to Class 1 of US Federal Standard Fed.Std.209D.

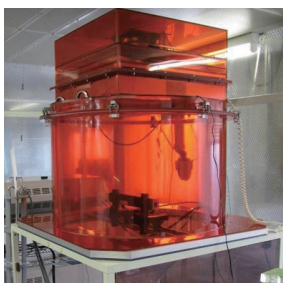

Particle Measuring Machine

Measurement Test Results① Particle Generation Test by Rotational Speed

Tested Produc	SC3005A-500U
Mounting Posture	Horizontal
Stroke	300mm
Rotational Speed	500/1000/1500/2000min^{-1}
Acceleration Time	0.1sec
Sample Air Volume	1CF (28.3 Liters)
Measurement time	2h (10min/time, 6 times/1h)
Suction Time	10 Liters/min
Air flow speed of Measuring part	2.5m/sec

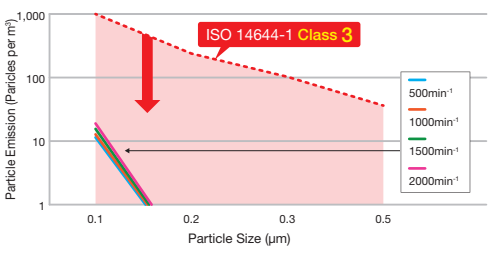

Measurement Test Results② Particle Generation Test by Mounting Posture

Tested Produc	SC3005A-500U
Mounting Posture	Horizontal, vertical, and upside down
Stroke	300mm
Rotational Speed	2000min^{-1}
Acceleration Time	0.1sec
Sample Air Volume	1CF (28.3 Liters)
Measurement time	2h (10min/time, 6 times/1h)
Suction Time	10 Liters/min
Air flow speed of Measuring part	2.5m/sec

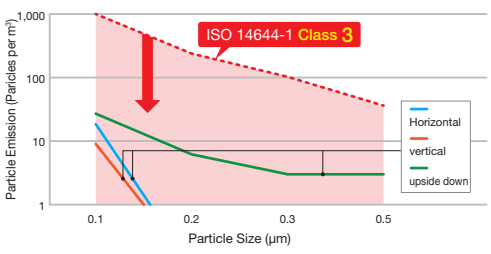

*The suction port fitting shown here is for illustrative purposes only. It is not included. Please order separately.
*Cleanroom performance varies depending on the operating environment and operating conditions.

VARIATIONS

Model No.		SC23	SC30	SC45
Performance grade		H: Repeated positioning accuracy ±3μm (Note 1) (Note 2) U: Repeated positioning accuracy ±5μm (Note 2) W: Repeated positioning accuracy ±10μm (Note 2)		
Screw shaft dia. (mm)		8	10	15
Lead (mm)	2	◎	●	
	4	●	◎	
	5	◎	◎	◎
	6		◎	
	8	●		
	10		◎	◎
	20		◎	◎

◎ : In-stock items ● : Manufactured by order

(Note 1) There is no Performance Grade H in SC30 leads 6mm and 20mm.

(Note 2) Performance may be different from the values shown above, depending on applied options and usage.

SPECIFICATIONS

Model No.				SC2302		SC2305			SC3004			SC3005			SC3006		SC3010			SC3020		SC4505			SC4510			SC4520		
Performance grade				W	U	W	U	H	W	U	H	W	U	H	W	U	W	U	H	W	U	W	U	H	W	U	H	W	U	H
Guide	Radial clearance		μm	−3～0					−3～0													−5～0								
	Long block	Basic dynamic load rating C	kN	4.3					7													27								
		Basic static load rating C_0	kN	7.0					11.8													45.0								
		Static permissible moment (Note 1) M_P	N·m	29					43													72								
		Static permissible moment (Note 1) M_Y	N·m	69					118													234								
		Static permissible moment (Note 1) M_R	N·m	34					50													87								
Ball screw	Shaft diameter		mm	8					10													15								
	Lead		mm	2		5			4			5			6		10			20		5			10			20		
	Basic dynamic load rating	C_a	kN	1.8		1.9			3.0			3.0			3.0		2.0			2.2		5.1			5.1			3.1		
	Basic static load rating	C_{0a}	kN	3.2		3.1			5.3			5.3			5.3		3.2			3.5		10.5			10.5			6.6		
Fixed side bearing	Model No. of bearing			AC6-16DF or equivalent					708DFP5 or equivalent													5201A or equivalent								
	Basic dynamic load rating	C_b	kN	1.79					4.40													5.90								
	Basic static load rating	C_{0b}	kN	1.76					4.36													3.20								

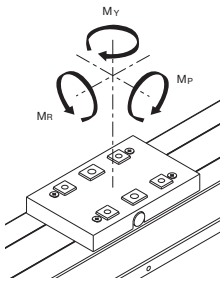

(Note 1) Static permissible moment shows rigidity value based on dimensions and material of table.

ACCURACY

Model No.	Guide rail length (mm)	Repeated positioning accuracy (μm)			Positioning accuracy (μm)			Travelling parallelism B (μm)			Backlash (μm)			Starting torque (Note 2) (N・m)		
		W	U	H	W	U	H	W	U	H	W	U	H	W	U	H
SC23	150	±10	±5	±3	70		60	15		15	20	5	5	0.03	0.06	0.06
	200				75											
	250				85											
	300				90											
SC30	150	±10	±5	±3	70		60	15		15	20	5	5	0.07	0.15	0.15
	200				80											
	300				90											
	400				95											
	500				100		100	25		25						
	600				110											
	700			—	120		—			—			—			—
	750				130											
SC45	540	±10	±5	±3	110		100	40		40	20	5	5	0.1	0.2	0.2
	640				120											
	740				130		120									
	840				150		150	50		50						
	940				170											

(Note 1) Measurement is to be performed with KURODA's specified motor mounted.

(Note 2) Above starting torque value is applied when the standard grease is used. The value may change depending on the properties of the grease.

Ball Screws

Screw shaft diameter and lead combinations (standard products)

◆ Standard Ball Screws / For Transport　C7 Grade, C10 Grade

Nominal Diameter (mm) \ Lead	2	2.5	4	5	6	8	10	15	16	20	25	32	40
8	○ △ ◎ ●		○ ◎	◎		◎							
10	○ ◎	◎ ●	○ ◎ ●	◎			○ ◇ ◎ ●						
12	○		○ ◎ ●	○		◎	○ ◇ ◎ ●			○ ◇			
15	○		○	○ ◇ ◎ ●			○ ◇ ◎ ●	○	◎ ●	○ ◇ ◎ ●			
16				★			★		○ ★	★		◎ ●	
20			○	○ ◎ ● ★			○ ◇ ◎ ● ★			○ ◇ ◎ ● ★			◎ ●
25				○ ◇ ◎ ● ★			○ ◇ ◎ ● ★			○	○ ◇ ◎ ● ★		
28					◎								
32				○			○ ◎					◎	
36							◎			◎			
40							◎			◎			◎

○: GE Series (accuracy grade C7)
◇: FE Series (accuracy grade C7)
◎: GY Series (accuracy grade C10)
●: GW Series (accuracy grade C7)
△: RW Series (accuracy grade C7)
★: AD Series (accuracy grade C7)

◆ Standard Ball Screws / For Positioning　C3 Grade, C5 Grade

Nominal Diameter (mm) \ Lead (mm)	1	2	3	4	5	10	12	15	16	20	25	30	32	40	60
6	△														
8	△	● ○ △		●			◎								
10		● ○ △		●		● ◆									
12		● ○ △	△	●	● ○	● ◆				● ◆		◎			
14				△											
15		● ○		● ○	● ◆ ○	● ◆		●		● ◆ ◎				◎	
16					★	★			● ★	★			◎		
20				● ○	● ★ ○	● ★ ◆				● ◆ ◎ ★		◎		◎	◎
25					● ★ ◆	● ★ ◆				●	● ★ ◆				
32					●	●									

●: GG Series (accuracy grade C5)
◆: FG Series (accuracy grade C5)
○: GP Series (accuracy grade C3)
△: DP Series (accuracy grade C3)
◎: HG Series (accuracy grade C5)
★: AH Series (accuracy grade C5)

◆ Order Made Ball Screws

Nominal Diameter (mm) \ Lead (mm)	1	1.5	2	2.5	4	5	6	8	10	15	16	20	30	32	40	50
6	◎		◎			◎										
8	◎	◎	◎	◎	◎	◎	◎	◎								
10	◎	◎	◎	◎	◎	◎	◎	◎	◎							
12		◎	◎	◎	◎	◎	◎	◎	◎			◎				
14			◎		◎	◎		◎	◎							
15			◎	◎	◎	◎	◎	◎	◎	◎	◎	◎	◎			
16			◎		◎	◎	◎		◎		◎	◎				
20			◎	◎	◎	◎	◎	◎	◎			◎	◎			
25			◎	◎	◎	◎	◎	◎	◎			◎				
32					◎	◎	◎	◎	◎			◎		◎		
40						◎	◎	◎	◎		◎	◎		◎	◎	
50						◎	◎	◎	◎		◎	◎			◎	◎
55								◎	◎		◎	◎				
63							◎	◎	◎		◎	◎				
80									◎	◎	◎	◎				
100									◎		◎	◎				
125											◎	◎				

◎: GR Series, DR Series, FR Series

KURODA JENATEC

◆ Standard Products

◎ No additional machining

GE 15 05 D S - B A L R - 0600 A

(1) (2) (3) (4)(5) (6)(7)(8)(9) (10) (11)

◎ Additional machining

GE 15 05 D S - B A L R - 0600 X 0500 - C7 M

(1) (2) (3) (4)(5) (6)(7)(8)(9) (10) (11) (12) (13)(14)

◆ Order Made Products

GR 15 05 D S - B A L R - 0600 X 0500 - C7 M

(1) (2) (3) (4)(5) (6)(7)(8)(9) (10) (11) (12) (13)(14)

(1) Series
Order made products
GR : GR Series (C0 to C10)
DR : DR Series (C0 to C10)
FR : FR Series (C1 to C7)

(2) Screw shaft diameter (mm)
5 to 125
Example: 5: 05, 6: 06, 10: 10
100: A0, 125: C5

(3) Lead (mm)
1 to 60
Example: 5: 05

(4) Number of Circuits
A : 1.5 turns per 1 row
B : 1.5 turns per 2 rows
D : 2.5 turns per 1 row
E : 2.5 turns per 2 rows
G : 3.5 turns per 1 row
2 : 1.7 turns per 1 row (A Series)
3 : 2.7 turns per 1 row (A Series)
4 : 3.7 turns per 1 row (A Series)
J : 1 turn per 3 rows
K : 1 turn per 4 rows
Q : End cap type
P : End deflector type
Z : Other

(5) Nut Type
S : Single nut
T : Integral nut
D : Double nut
Z : Other

(6) Flange Type
A to H: Catalog shape
N : No flange
Z : Other

(7) Ball Re-circulation System
A : Tube method
D : Deflector method
E : End cap method
P : End deflector method
S : Side deflector method
Z : Other

Standard products
GP : GP Series (C3)
DP : DP Series (C3)
GG : GG Series (C5)
FG : FG Series (C5)
HG : HG Series (C5)
AH : AH Series (C5)
GE : GE Series (C7)
FE : FE Series (C7)
AD : AD Series (C7)
GW : GW Series (C7)
GY : GY Series (C10)

(8) Wiper
P : Plastic wiper
L : Lip seal
S : LUBSEAL
N : No wiper

(9) Thread Direction
R : Right

(10) Overall Screw Shaft Length (mm)

(11) End shape, etc.
When ordering as a shaft/nut set
A : Both ends unmachined (standard products)
B : Single end completed (standard products)
X : Both ends completed (order made or standard product with additional machining)

(12) Thread Length (mm)

(13) Accuracy Grade
C0, C1, C2, C3, C4, C5, C7, C10

(14) Axial Clearance
S : Clearance of 0
F : Clearance of 0.005 mm or less
H : Clearance of 0.010 mm or less
M : Clearance of 0.030 mm or less
L : Clearance of 0.2 mm or less
Y : Rolled ball screw axial clearance
Z : Other

◆ Accuracy and Cost

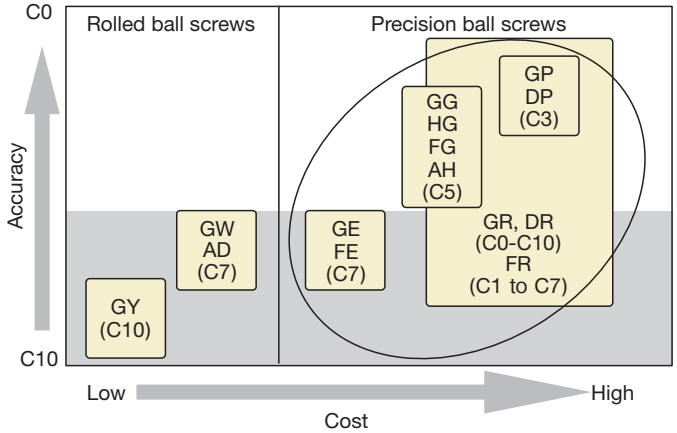

KURODA JENATEC

◆ G Series / Tube Method GE (accuracy grade C7)/GG (accuracy grade C5)

GE Shaft diameter Lead □□—□□·□—Overall Screw Shaft Length A
GG Shaft diameter Lead □□—□□·□—Overall Screw Shaft Length A
Model Number

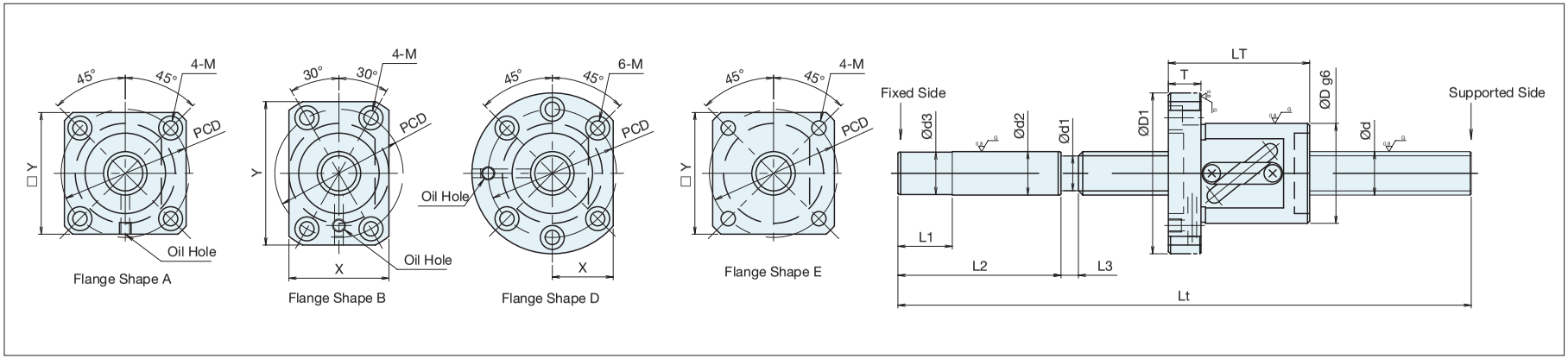

(unit: mm)

Model Number	Screw Shaft Diameter d	Lead	Root Diameter d1	Number of Circuits	Axial Clearance Symbol	Basic Dynamic Load Rating (N)	Basic Static Load Rating (N)	Screw Shaft Dimensions: Shaft End Diameter d2	Shaft End Diameter d3	Shaft End Length L1	Shaft End Length L2	Shaft End Length L3	Overall Screw Shaft Length Lt	Nut Dimensions: Body Diameter D	Total Length LT	Flange Thickness T	Flange Diameter D1	Flange Width Y	Flange Width X	Flange PCD P	Mounting Bolt Hole M	Shape	Type of Wiper	Oil Hole
GE/GG0802DS-AANR-□□□□A	8	2	6.6	2.5×1	M:FE F:FG	1 950	2 600	12	11.7	20	45	3	215	20	30	5	36	28	---	27	M3	A	N	N/A
GE/GG0804DS-BAFR-□□□□A		4	6.3			2 350	3 300					6	215/340	22			38	34	24	29		B	F	
GE/GG1002DS-EANR-□□□□A	10	2	8.6	2.5×1		2 250	3 300	10	9.7	20	45	3	250/320	23	27	5	40	31	---	31	M4	E	N	
GE/GG1004DS-BAPR-□□□□A		4	8.1			3 350	5 900	12	11.7		55	5	255/385/455	26	37	8	46	42	28	36		B	P	
GE/GG1010AS-BAPR-□□□□A		10		1.5×1		2 200	3 500	14	13.7			8	255/455	28	40		47	45	30					
GE/GG1202DS-AAPR-□□□□A	12	2	10.6	2.5×1		2 450	4 100	12	11.7	20	50	3	300/455	25	35	8	44	34	---	33	M4	A		
GE/GG1204DS-AALR-□□□□A		4	10.1			3 600	6 750				55	5	405	30	41	10	54	41	---	41	M5		L	
GE/GG1205DS-BALR-□□□□A		5	9.5			5 950	9 800						305/455		44		50	45	32	40	M4	B		
GE/GG1210AS-BALR-□□□□A		10		1.5×1		3 850	5 900						455/605		49	12	54	48		41	M5			
GE/GG1220AS-BALR-□□□□A		20											405/605	32	68		56			43				
GE/GG1502DS-BAPR-□□□□A	15	2	13.6	2.5×1		2 700	5 500	15	14.5	25	55	3	300/600	34	54	10	58	50	34	45	M5		P	M6
GE/GG1504DS-BALR-□□□□A		4	13.1			4 100	8 550					5	600/1 100	32	41		56	48	32	43			L	
GE/GG1505DS-BA*R-□□□□A		5	12.5			6 900	12 500						600/1 100	34	44		58	50	34	45			L/S	
GE/GG1510AS-BA*R-□□□□A		10		1.5×1		4 400	7 900						600/900/1 100		52	12								
GE/GG1510DS-BA*R-□□□□A				2.5×1		6 900	12 500						600/900/1 100											
GE/GG1515AS-BA*R-□□□□A		15		1.5×1		4 400	7 900						600/900/1 100		54									
GE/GG1520AS-BA*R-□□□□A		20											600/900/1 100		62									
GE/GG1616AS-BT*R-□□□□A	16	16	13.5	1.5×1		4 750	8 300	16	15.5	25	55	5	600/900	34	54	12	58	50	34	45	M5		L/S	M6
GE/GG2004ES-AALR-□□□□A	20	4	18.1	2.5×2		8 600	23 400	20	19.5	25	75	5	605	40	49	10	64	49	---	51	M5	A	L	M6
GE/GG2005DS-BA*R-□□□□A		5	17.5	2.5×1		8 350	17 500						605/1 005		48	12	68	60	40	53	M6	B	L/S	
GE/GG2010DS-BA*R-□□□□A		10	16			13 500	25 100					8	605/1 005/1 505	46	65	15	74	66	46	59				
GE/GG2020AS-BA*R-□□□□A		20	15.9	1.5×1		9 200	16 200						1 005/1 505	46	70				46	59				
GE/GG2505DS-AA*R-□□□□A	25	5	22.5	2.5×1		9 400	22 200	25	24.5	25	100	5	600/1 000/1 505	47	48	12		57	---	60	M6	A		
GE/GG2510DS-BA*R-□□□□A		10				16 100	33 400						1 020/1 520	52	65	15	86	78	52	68	M8	B	L/S	M6
GE/GG2520AS-BA*R-□□□□A		20	21	1.5×1		10 400	20 100					8	1 020/1 520		70				52	68				
GE/GG2525AS-BA*R-□□□□A		25											1 020/1 520	54	77		88		54	70				
GE/GG3205ES-DALR-□□□□A	32	5	29.5	2.5×2		19 000	57 200	32	31.5	25	150	5	600/1 000	58	58	12	85	---	32	71	M6	D	L	M6
GE/GG3210DS-DALR-□□□□A		10	27.2	2.5×1		25 800	55 600				200	10	1 000/1 600/2 000	74	68	15	108	---	41	90	M8			

□□□□ in model number: Total length Axial clearance: M: 0.030 mm or less, F: 0.005 mm or less Type of wiper: N: N/A, F: Felt, P: Plastic, L: Lip seal, S: LUBSEAL (* symbol indicates that L: Lip seal or S: LUBSEAL [optional] can be selected).

Refer to page 27 for ball screw support units and low particle generating grease.

◆ F Series / End Deflector Method FE (accuracy grade C7)/FG (accuracy grade C5)

FE [Shaft diameter] [Lead] PS-HP [*] [ ] — [Overall Screw Shaft Length] A
FG [Shaft diameter] [Lead] PS-HP [*] [ ] — [Overall Screw Shaft Length] A
Model Number

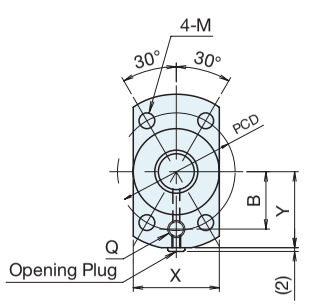

FE/FG1010PS
FE/FG1210PS
FE/FG1220PS
FE/FG1505PS
FE/FG1510PS
FE/FG1520PS

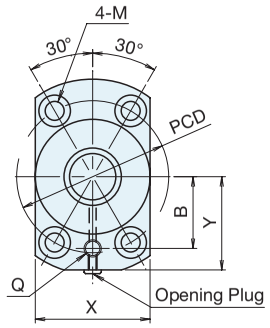

FE/FG2010PS
FE/FG2020PS
FE/FG2505PS
FE/FG2510PS
FE/FG2525PS

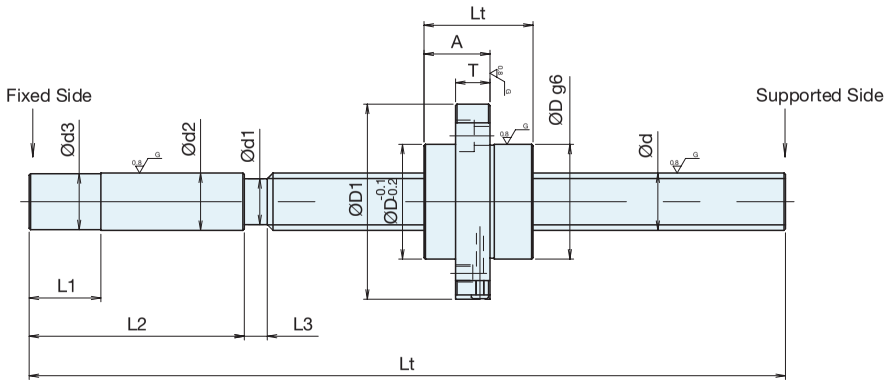

(unit: mm)

Model Number	Screw Shaft Diameter d	Lead	Root Diameter d1	Number of Circuits	Axial Clearance	Basic Dynamic Load Rating (N)	Basic Static Load Rating (N)	Screw Shaft Dimensions						Nut Dimensions												
								Shaft End					Overall Screw Shaft Length Lt	Body Diameter D	Total Length Lt	Length A	Flange									Oil Hole Q
								Diameter d2	Diameter d3	Length L1	Length L2	Length L3					Thickness T	Diameter D1	Width X	Width Y	PCD P	Oil Hole Position B	Mounting Hole M	Mounting Hole M Counterbore Hole	Mounting Hole M Counterbore Depth	
FE/FG1010PS-HPNR-□□□□A	10	10	8.1	1.7×1	M:FE F:FG	2 600	3 800	14	13.7	20	55	8	255/455	23	27	17.5	10	44	24	21.5	32	16	4.5	-	-	M3
FE/FG1210PS-HPNR-□□□□A	12	10	9.5	2.7×1		6 700	10 700	12	11.7			5	455/605	27	38	19.5	10	47	27	23	36	18	4.5			
FE/FG1220PS-HPNR-□□□□A		20	9.5	1.7×1		4 300	6 700	12					405/605	27	48	20	10	47	27	23	36	18	4.5			
FE/FG1505PS-HPNR-□□□□A	15	5	12.5	2.7×1		7 400	12 900	15	14.5	25	55	5	600/1 100	30	25	17.3	9.5	54	30	26.5	41	20	5.5	-	-	M6
FE/FG1510PS-HPNR-□□□□A		10	12.5	2.7×1		7 400	12 900						600/900/1 100	30	38	20	10	54	30	26.5	41	20				
FE/FG1520PS-HPNR-□□□□A		20	12.5	1.7×1		4 800	8 200						600/900/1 100	30	48	20.5	10	54	30	26.5	41	20				
FE/FG2010PS-HPNR-□□□□A	20	10	16	2.7×1		18 000	33 900	20	19.5	25	75	8	605/1 005/1 505	40	38	23	12	68	40	32.5	53	25	6.6	11	6.5	M6
FE/FG2020PS-HPNR-□□□□A		20	15.9	1.7×1		11 600	20 600						1 005/1 505		48	23	12									
FE/FG2505PS-HPNR-□□□□A	25	5	22.5	3.7×1		13 100	31 800	25	24.5	25	100	5	600/1 000/1 505	40	30	20	12	68	40	32.5	53	25				
FE/FG2510PS-HPNR-□□□□A		10	21	2.7×1		20 400	42 600					8	1 020/1 520	45	37	25	15	74	45	35.5	59	28				
FE/FG2525PS-HPNR-□□□□A		25		1.7×1		13 100	25 900						1 020/1 520		58	27	15									

□□□□ in model number: Total length Axial clearance: M: 0.030 mm or less, F: 0.005 mm or less (* symbol indicates that N: N/A or S: LUBSEAL [optional] can be selected).

Refer to page 27 for ball screw support units and low particle generating grease.

◆ H Series / End Cap Method HG (accuracy grade C5) for high-speed transport

HG | Shaft diameter | Lead | □□ – □□□□ – | Overall Screw Shaft Length | A
Model Number

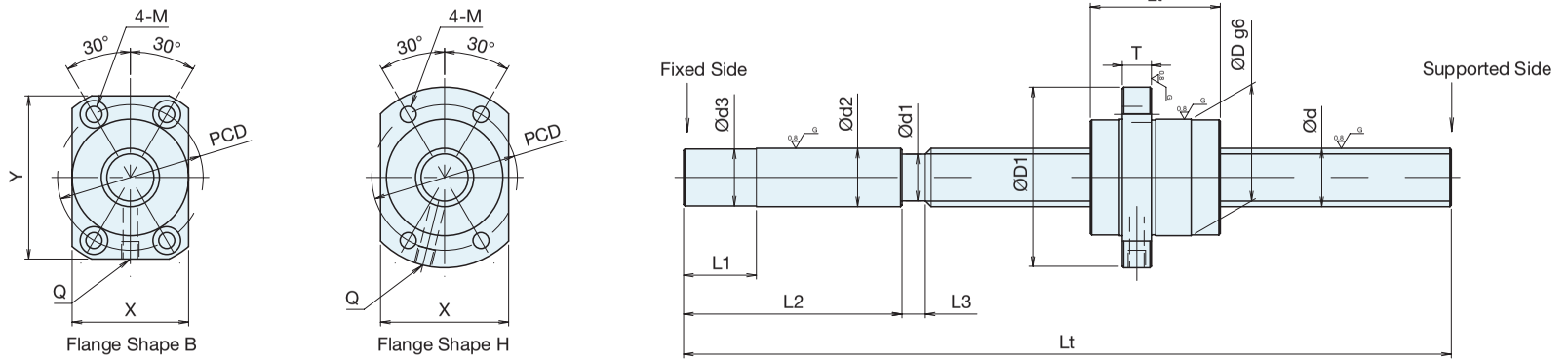

(unit: mm)

Model Number	Screw Shaft Diameter d	Lead	Root Diameter d1	Number of Circuits	Axial Clearance Symbol	Basic Dynamic Load Rating (N)	Basic Static Load Rating (N)	Screw Shaft Dimensions (mm)						Nut Dimensions (mm)											
								Shaft End					Total Length Lt	Body Diameter D	Total Length LT	Flange							Type of Wiper	Oil Hole
								Diameter d2	Diameter d3	Length L1	Length L2	Length L3				Thickness T	Diameter D1	Width Y	Width X	PCD P	Mounting Bolt Hole M	Shape		
HG0812QS-HEZR-□□□□A	8	12	---	1.67×2	H	2 490	3 460	12	11.7	20	45	12	340	18	27	4	31	-	20	25	M3	H	Z	N/A
HG1230QS-BEZR-□□□□A	12	30	9.5	0.67×3	H	4 800	6 650	12	11.7	20	55	15	500	32	35	10	56	48	32	43	M5	B	Z	
HG1520QS-HEZR-□□□□A	15	20	12.5	1.67×2	F	8 740	17 550	15	14.5	25	55	10	600/1 100	34	47.5	10	55	-	34	45	M5	H	Z	M6
HG1540QS-BEZR-□□□□A		40	12.5	0.67×3	H	5 600	8 600					15	600/1 100		41.7	12	58	50	34	45		B		
HG1632QS-HEZR-□□□□A	16	32	13.5	0.67×3	F	6 100	9 100	16	15.5	25	55	15	600/1 100	35	36.3	10	56	-	38	44	M4	H	Z	
HG2020QS-HEZR-□□□□A	20	20	17.5	1.67×2	F	8 740	17 550	20	19.5	25	75	5	1 000/1 500	39	47.5	10	62	-	39	50	M5	H	Z	
HG2030QS-HEZR-□□□□A		30				10 690	2 330					5			64			-						
HG2040QS-HEZR-□□□□A		40		0.67×3		6 800	12 100					15		40	44.7			-	44					
HG2060QS-BEZR-□□□□A		60			H							20			58	12		56	40			B		

Axial clearance in model number: F: 0.005 mm or less, H: 0.010 mm or less Type of wiper: Z: End cap integrated lip, F: Felt

Refer to page 27 for ball screw support units and low particle generating grease.

◆ D Series / Deflector Method DP (accuracy grade C3)
◆ G Series / Tube Method GP (accuracy grade C3)

DP | Shaft diameter | Lead | □□ — □□□□ — | Overall Screw Shaft Length | B-C3 SF SF
GP | Shaft diameter | Lead | □□ — □□*□ — | Overall Screw Shaft Length | B-C3 SF SF
Model Number

DP Series

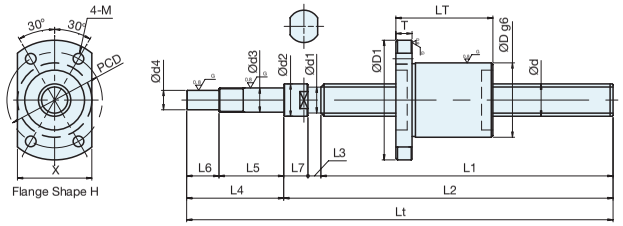

GP Series

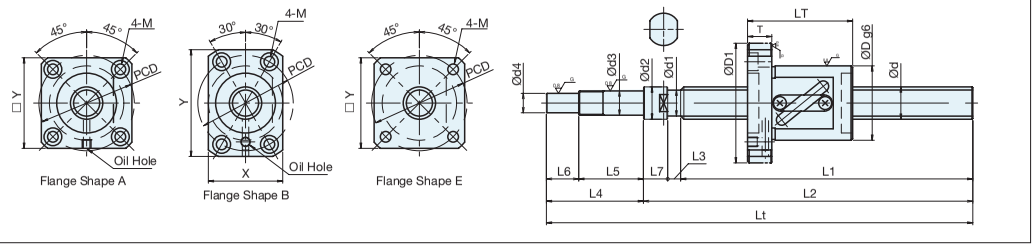

DP Series (unit: mm)

Model Number	Screw Shaft Diameter d	Lead	Root Diameter d1	Number of Circuits	Axial Clearance Symbol	Basic Dynamic Load Rating (N)	Basic Static Load Rating (N)	Screw Shaft Dimensions: Flange Diameter d2	Flange Length L7	Thread Length L1	Length L2	Total Length Lt	Shaft End Length L3	Shaft End Length L4	Shaft End Length L5	Shaft End Diameter d3	Shaft End Length L6	Shaft End Diameter d4	Nut Dimensions: Body Diameter D	Total Length LT	Flange Thickness T	Flange Diameter D1	Flange Width X	Flange PCD P	Mounting Bolt Hole M	Shape	Type of Wiper	Oil Hole
DP0601JS-HDNR-0130B-C3F/S	6	1	---	1×3	F/S	550	1 150	9.5	7	90	100	130	3	30	22.5	6	7.5	4.5	10	14.5	3.5	22	14	16	M3	H	N	N/A
DP0601JS-HDNR-0210B-C3F/S										170	180	210																
DP0801JS-HDNR-0180B-C3F/S	8	1	7.3	1×3		650	1 600	11.5	8	132	143	180	3	37	27	8	10	6	12	15	4	25	16	19	M3		N	N/A
DP0801JS-HDNR-0260B-C3F/S										212	223	260																
DP0802JS-HDNR-0130B-C3F/S		2	7			1 350	2 300			132	143	180	3						14	21	4	27	17	21	M3			
DP0802JS-HDNR-0210B-C3F/S										212	223	260																
DP1002JS-HDNR-0220B-C3F/S	10	2	9	1×3		1 550	3 000			172	183	220	3						16	22	5	33	21	25	M4		N	N/A
DP1002JS-HDNR-0320B-C3F/S										272	283	320																
DP1202JS-HDNR-0300B-C3F/S	12	2	11	1×3		1 650	3 600	14	10	242	255	300	3	45	30	10	15	8	18	22	5	35	22	27	M4		N	N/A
DP1202JS-HDNR-0400B-C3F/S										342	355	400																
DP1203JS-HDPR-0300B-C3F/S		3	10.3			3 450	6 100			240	255	300	5						21	36	5	38	23	30	M4		P	
DP1203JS-HDPR-0400B-C3F/S										340	355	400																
DP1404JS-HDPR-0330B-C3F/S	14	4	12.1	1×3		4 600	8 600	15	10	270	285	330	5	45	30	12	15	10	26	40	10	45	29	35	M4		P	M6
DP1404JS-HDPR-0530B-C3F/S										470	485	530																

Axial clearance in model number: S: 0 mm or less, F: 0.005 mm or less Type of wiper: N: N/A, P: Plastic

GP Series (unit: mm)

Model Number	Screw Shaft Diameter d	Lead	Root Diameter d1	Number of Circuits	Axial Clearance Symbol	Basic Dynamic Load Rating (N)	Basic Static Load Rating (N)	Screw Shaft Dimensions: Flange Diameter d2	Flange Length L7	Thread Length L1	Length L2	Total Length Lt	Shaft End Length L3	Shaft End Length L4	Shaft End Length L5	Shaft End Diameter d3	Shaft End Length L6	Shaft End Diameter d4	Nut Dimensions: Body Diameter D	Total Length LT	Flange Thickness T	Flange Diameter D1	Flange Width Y	Flange Width X	Flange PCD P	Mounting Bolt Hole M	Shape	Type of Wiper	Oil Hole
GP0802DS-AAFR-0170B-C3F/S	8	2	6.6	2.5×1	F/S	1 950	2 600	11.5	8	122	133	170	3	37	27	8	10	6	20	30	5	36	28	---	27	M3	A	F	N/A
GP0802DS-AAFR-0250B-C3F/S						(1 220)	(1 300)			202	213	250	3															
GP1002DS-EAFR-0210B-C3F/S	10	2	8.6	2.5×1		2 250	3 300	11.5	8	162	173	210	3	37	27	8	10	6	23	30	5	40	31	---	31	M4	E	F	N/A
GP1002DS-EAFR-0320B-C3F/S						(1 410)	(1 650)			272	283	320	3															
GP1202DS-AAPR-0300B-C3F/S	12	2	10.6	2.5×1		2 450	4 100	14	10	242	255	300	3	45	30	10	15	8	25	35	8	44	34	---	33	M4	A	P	N/A
GP1202DS-AAPR-0400B-C3F/S						(1 540)	(2 050)			342	355	400	3															
GP1205DS-BALR-0300B-C3F/S		5	9.5			5 950	9 800			240	255	300	5						30	44	10	50	45	32	40	M4	B	L	M6
GP1205DS-BALR-0450B-C3F/S						(3 740)	(4 900)			390	405	450	5															
GP1502DS-BAPR-0300B-C3F/S	15	2	13.6	2.5×1		2 700	5 500	15	10	242	255	300	3	45	30	12	15	10	30	37	10	54	48	32	41	M5	B	P	M6
GP1502DS-BAPR-0600B-C3F/S						(1 700)	(2 750)			542	555	600	3															
GP1504DS-BALR-0400B-C3F/S		4	13.1			4 100	8 550			340	355	400	5						32	41		56	48	32	43	M5		L	
GP1504DS-BALR-0600B-C3F/S						(2 580)	(4 270)			540	555	600	5															
GP1505DS-BA*R-0400B-C3F/S		5	12.5			6 900	12 500			340	355	400	5						34	44		58	50	34	45	M5		L/S	
GP1505DS-BA*R-0600B-C3F/S						(4 340)	(6 250)			540	555	600	5															
GP2004ES-AALR-0605B-C3F/S	20	4	18.1	2.5×2		8 600	23 400	20	15	525	545	605	5	60	40	15	20	12	40	49	10	64	49	---	51	M5	A	L	M6
GP2005DS-BA*R-0605B-C3F/S		5	17.5	2.5×1		8 350	17 500			525	545	605	5						40	48	12	68	60	40	53	M6	B	L/S	

Axial clearance in model number: S: 0 mm or less, F: 0.005 mm or less Type of wiper: N: N/A, F: Felt, P: Plastic, L: Lip seal, S: LUBSEAL (* symbol indicates that L: Lip seal or S: LUBSEAL [optional] can be selected).
Numbers in parentheses for the load rating indicate the load rating when axial clearance S is 0 mm or less.

Refer to page 27 for ball screw support units and low particle generating grease.

GY Shaft diameter Lead □□—□□·□—Overall Screw Shaft Length A
GW Shaft diameter Lead □□—□□·□—Overall Screw Shaft Length A
Model Number

Round Nuts

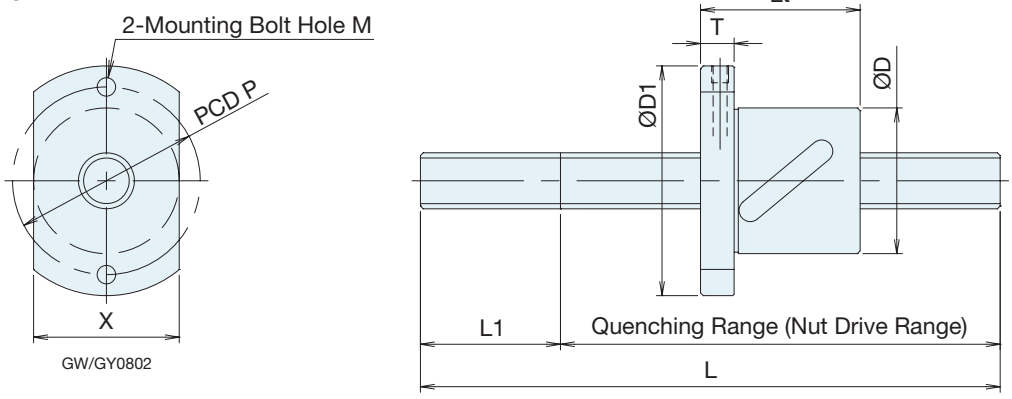

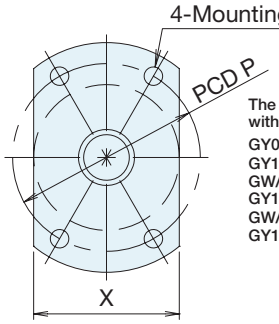

The figure at left applies to products with the following shapes
GY0804, GY0805, GY0808
GY1002, GW/GY102F
GW/GY1004
GY1005, GY1006
GW/GY1010
GY1202, GW/GY1204

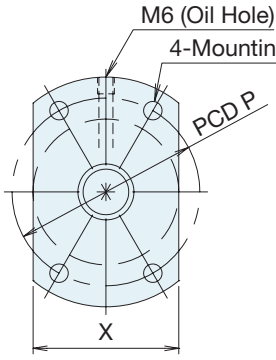

The figure at left applies to products with the following shapes
GY1208, GW/GY1210
GW/GY1505, GW/GY1510
GW/GY1516, GW/GY1520
GW/GY2005, GW/GY2010
GW/GY2020
GW/GY2505, GW/GY2510
GW/GY2525
GY2806
GY3210, GY3232
GY3610, GY3620
GY4010, GY4020, GY4040

(unit: mm)

Model Number	Screw Shaft Diameter d	Lead	Root Diameter	Number of Circuits	Basic Dynamic Load Rating (N)	Basic Static Load Rating (N)	Screw Shaft Dimensions		Nut Dimensions							
							Overall Screw Shaft Length L	End Length L1	Body Diameter D	Total Length Lt	Thickness T	Diameter D1	Width X	PCD P	Mounting Bolt Hole M	Oil Hole Q
GW/GY0802GS-HGNR-□□□□A	8	2	6.6	3.5×1	1 800	3 200	200/400	55	20	28	6	40	24	30	M4	N/A
GY0804DS-HANR-□□□□A		4	6.3	2.5×1	1 900	3 100			23	28	5	38	24	30	M3	
GY0805DS-HUNR-□□□□A		5	6.4	2.5×1	1 900	3 100			22	27	6	38	22	29	M3	
GY0808DS-HANR-□□□□A		8	6.3	2.5×1	1 200	1 800			23	28	5	38	24	30	M3	
GY1002DS-HANR-□□□□A	10	2	8.4	2.5×1	1 700	3 000	400/600	60	23	28	6	43	27	33	M4	N/A
GW/GY102FGS-HGNR-□□□□A		2.5	8.2	3.5×1	2 600	5 200			24	32	8	44	27	34	M4	
GW/GY1004DS-HANR-□□□□A		4	7.8	2.5×1	2 300	4 800			26	34	8	46	28	36	M4	
GY1005DS-HUNR-□□□□A		5	7.7	2.5×1	2 300	4 800			26	32	8	42	26	34	M4	
GY1006DS-HANR-□□□□A		6	7.7	2.5×1	2 300	4 800			26	36	8	42	26	34	M4	
GW/GY1010AS-HANR-□□□□A		10	7.8	1.5×1	1 850	3 200			28	34	8	47	30	36	M4	
GY1010BS-HANR-□□□□A			7.8	1.5×2	3 360	6 400			28	34	8	47	30	36	M4	
GY1202DS-HANR-□□□□A	12	2	10.6	2.5×1	2 000	3 600	400/800	60	25	30	8	42	27	34	M4	N/A
GW/GY1204DS-HANR-□□□□A		4	10	2.5×1	2 600	5 800			30	35	8	50	30	40	M4	
GY1208DS-HULR-□□□□A		8	10	2.5×1	3 800	6 700			29	44	10	45	30	37	M4	M6
GW/GY1210AS-HULR-□□□□A		10	9.6	1.5×1	2 850	4 950			30	44	12	54	32	41	M5	
GW/GY1210BS-HULR-□□□□A		10	9.6	1.5×2	5 100	9 900			30	44	12	54	32	41	M5	
GW/GY1505DS-HU*R-□□□□A	15	5	12.5	2.5×1	5 100	10 500	600/1200	60	34	40	10	54	34	44	M4	M6
GW/GY1510DS-HU*R-□□□□A		10	12.5	2.5×1	5 100	10 500			34	52	10	57	34	45	M5	
GW/GY1510ES-HU*R-□□□□A		10	12.5	2.5×2	9 200	21 000			34	52	10	57	34	45	M5	
GW/GY1516BS-HULR-□□□□A		16	12.7	1.5×2	4 300	10 200			32	51	10	53	32	42	M4	
GW/GY1520BS-HU*R-□□□□A		20	12.5	1.5×2	5 800	13 300			34	59	10	57	34	45	M5	
GW/GY2005DS-HU*R-□□□□A	20	5	17.5	2.5×1	6 200	14 700	600/1 200/2 000	80	40	40	10	60	40	50	M4	M6
GW/GY2010DS-HU*R-□□□□A		10	16.3	2.5×1	10 600	22 700			52	57	12	82	52	67	M6	
GW/GY2020DS-HU*R-□□□□A		20	17.5	2.5×1	6 200	14 700			39	78	10	62	39	50	M5	
GW/GY2020ES-HU*R-□□□□A		20	17.5	2.5×2	11 200	29 400			39	78	10	62	39	50	M6	
GW/GY2505DS-HU*R-□□□□A	25	5	21.8	2.5×1	6 600	18 700	1 000/2 000/2 500	110	43	40	10	67	43	55	M5	M6
GW/GY2505ES-HU*R-□□□□A		5	21.8	2.5×2	11 900	37 300			43	55	10	67	43	55	M5	
GW/GY2510ES-HU*R-□□□□A		10	20.3	2.5×2	27 500	76 300			60	92	15	96	60	78	M8	
GW/GY2525DS-HU*R-□□□□A		25	21.5	2.5×1	9 300	22 700			47	96	12	74	47	60	M6	
GY2525ES-HU*R-□□□□A		25	21.5	2.5×2	16 800	45 400			47	96	12	74	47	60	M6	
GY2806ES-HUBR-□□□□A	28	6	25.6	2.5×2	12 100	42 300	1 000/2 000/2 500	150	50	65	12	80	50	65	M6	M6
GY3210ES-HUBR-□□□□A	32	10	27.2	2.5×2	32 800	86 700	1 000/2 000/3 000	150	67	92	15	103	67	85	M8	M6
GY3232BS-HUBR-□□□□A		32	27.8	1.5×2	14 600	38 900			58	86	15	92	58	74	M8	
GY3610ES-HUBR-□□□□A	36	10	31.1	2.5×2	35 100	98 200	1 000/2 000/3 000	200	70	93	17	110	70	90	M10	M6
GY3620ES-HUBR-□□□□A		20	31.1	2.5×2	35 100	98 200			70	89	17	110	70	90	M10	
GY4010ES-HUBR-□□□□A	40	10	35.1	2.5×2	37 100	105 600	2 000/3 000/4 000	200	76	93	17	116	76	96	M10	M6
GY4020ES-HUBR-□□□□A		20	35.1	2.5×2	37 100	105 600			76	89	17	116	76	96	M10	
GY4040BS-HUBR-□□□□A		40	35.1	1.5×2	23 900	66 900			73	103	17	114	73	93	M10	

□□□□ in the model number is the overall screw shaft length.
A * symbol in the model number indicates that either L: Lip seal or S: LUBSEAL (optional) can be selected.

Refer to page 27 for ball screw support units and low particle generating grease.

GY Shaft diameter Lead □□—□□□·□—Overall Screw Shaft Length A
GW Shaft diameter Lead □□—□□□·□—Overall Screw Shaft Length A
Model Number

Square Nuts

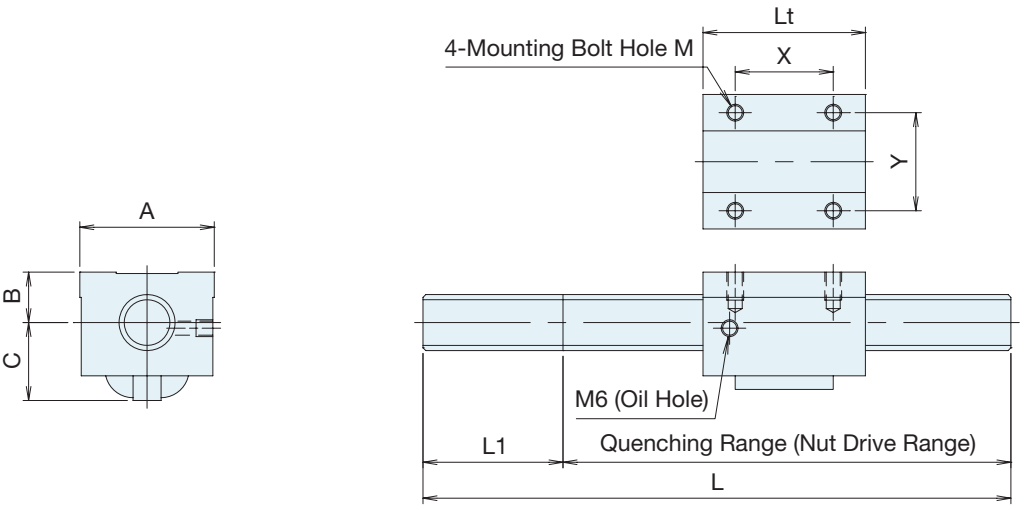

(unit: mm)

Model Number	Screw Shaft Diameter d	Lead	Root Diameter	Number of Circuits	Basic Dynamic Load Rating (N)	Basic Static Load Rating (N)	Screw Shaft Dimensions		Nut Dimensions							
							Total Length L	End Length L1	Length A	Mounting Surface Height B	Height C	Total Length Lt	Mounting Hole Pitch X	Mounting Hole Pitch Y	Mounting Bolt Hole M	Oil Hole Q
GW/GY1505DS-NKLR-□□□□A	15	5	12.5	2.5×1	5100	10500	600/1200	60	34	13	18	35	22	26	M4	M6
GW/GY1510DS-NKLR-□□□□A		10	12.5	2.5×1	5100	10500			36	15	22	52	32	26	M5	M6
GW/GY2005DS-NKLR-□□□□A	20	5	17.5	2.5×1	6200	14700	600/1200/2000	80	48	17	22	35	22	35	M6	M6
GW/GY2010DS-NKLR-□□□□A		10	16.3	2.5×1	10600	22700			48	18	30	58	35	35	M6	M6
GW/GY2505DS-NKLR-□□□□A	25	5	21.8	2.5×1	6600	18700	1000/2000/2500	110	60	20	25	35	22	40	M8	M6
GW/GY2510ES-NKLR-□□□□A		10	20.3	2.5×2	27500	76300			60	23	30	94	60	40	M8	M6
GY3210ES-NKBR-□□□□A	32	10	27.2	2.5×2	32800	86700	1000/2000/3000	150	86	29	38	96	60	60	M10	M6

□□□□ in the model number is the overall screw shaft length.

Refer to page 27 for ball screw support units and low particle generating grease.

Order Made Ball Screws / GR, DR, FR Series

Order made ball screws have a standardized nut shape for the tube type (GR), deflector type (DR) and end deflector type (FR) circulation methods, allowing use in a wide range of applications.

◆ Accuracy Grade and Axial Clearance

Single nut, axial clearance 0: C0S to C5S
Single nut, axial clearance 0.005 mm or less: C1F to C5F
Single nut, axial clearance 0.030 mm or less: C4M, C5M, C7M
Single nut, axial clearance 0.20 mm or less: C7L, C10L
Integral nut, axial clearance 0: C0S to C5S
Double nut, axial clearance 0: C0S to C5S

◆ Single Nut Preload

Oversized Steel Ball

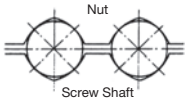

Tension

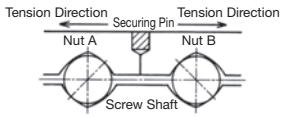

◆ Double Nut Preload

Compression

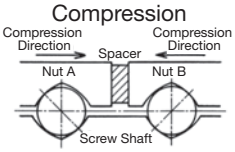

◆ Integral Nut Preload

Offset

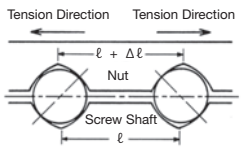

◆ Other

Contact us for more information regarding the manufacture of ball screws for use in special environments, such as stainless steel products or those with special surface treatment or using special grease.

◆ Range of Available Screw Shafts by Accuracy Grade

(unit: mm)

Accuracy Grade	Screw Shaft Nominal Diameter																			
	5	6	8	10	12	15	16	20	25	28	32	36	40	45	50	63	70	80	100	125
C0	90	160	240	340	420	500	500	800	1 100	1 200	1 600	1 800	2 000	2 000	2 000	2 000	-	-	-	-
C1	120	180	280	400	500	600	600	900	1 300	1 500	1 800	2 000	2 200	2 300	2 800	3 000	3 000	3 000	3 000	3 000
C2	120	180	280	400	500	600	600	1 100	1 600	1 800	2 200	2 500	2 800	3 000	3 600	4 000	4 500	4 500	4 500	4 500
C3	140	210	340	480	600	700	700	1 400	1 800	2 000	2 500	2 800	3 200	3 600	4 000	5 000	5 000	5 000	5 000	5 000
C4	140	210	340	480	600	800	800	1 400	1 800	2 000	2 500	2 800	3 200	3 600	4 000	5 000	5 000	5 000	5 000	5 000
C5	140	210	340	500	700	1 500	1 500	2 000	2 000	2 000	2 800	3 100	3 600	4 100	4 500	5 000	5 000	5 000	5 000	5 000
C7	-	-	340	500	700	1 500	1 500	2 000	2 300	2 600	3 200	3 600	4 600	5 000	5 000	5 000	5 000	5 000	5 000	5 000
C10	-	-	-	-	-	1 500	1 500	2 000	2 300	2 600	3 600	4 000	4 600	5 000	5 000	5 000	5 000	5 000	5 000	5 000

• The available accuracy grades are C2 to C10 for products with leads equal to or exceeding the shaft dimension.

◆ Screw Shaft Diameter and Lead Combinations

Nominal Diameter (mm) \ Lead (mm)	1	1.5	2	2.5	3	4	5	6	8	10	12	15	16	20	25	30	32	40	50
5	○																		
6	△																		
8	△	○	○ △	○	○	○		○	○										
10	○	○	○ △	○	○	○	○			○ ◇									
12		○	○ △	○	○	○	○	○		○ ◇				○ ◇					
14						△													
15		○	○	○	○	○	○ ◇	○	○	○ ◇		○	○	○ ◇	○	◇			
16						○	○ △	○					○						
20				○		○	○ △	○	○	○ △ ◇				○ ◇	○		○	◇	
25						○	○ △ ◇	○	○	○ △ ◇				○	○ ◇			○	◇
28							○			○									
32						○	○ △ ◇	○	○ ◇	○ △ ◇	○ ◇		◇	○			○		
36							○	○	○	○	○ ◇		◇	○					
40							○	○	○ ◇	○ △ ◇	○ ◇		○ ◇	○			○	○	
45							○	○	○	○	○			○					
50							○	○	○	○ △	○		○	○				○	○
55									○	○	○		○	○					
63								○	○	○	○		○	○					
70										○	○		○	○					
80										○	○		○	○					
100											○		○	○					
125													○	○					

○: GR Series (tube method)
△: DR Series (deflector method)
◇: FR Series (end deflector method)

KURODA JENATEC

Ball Screw Lubrication Unit LUBSEAL™

The “LUBSEAL” is a lubrication unit that is fitted in contact with the shaft thread and supplies a proper amount of lubricant. Designed to maximize ball screw performance without sacrificing shaft length, “LUBSEAL” lubrication units prolong the period of maintenance-free operation with no loss in range of motion. This standard feature of ball screws is ideal for semiconductor and LCD manufacturing and inspection equipment, food manufacturing equipment, medical equipment, machine tools, and automobile production equipment.

◆ Installation Structure for G Series

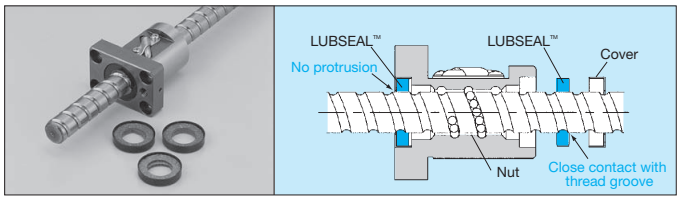

◆ Installation Structure for F Series

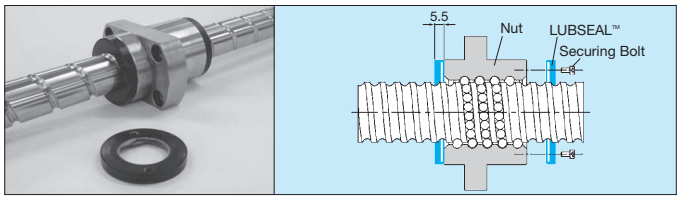

◆ Performance

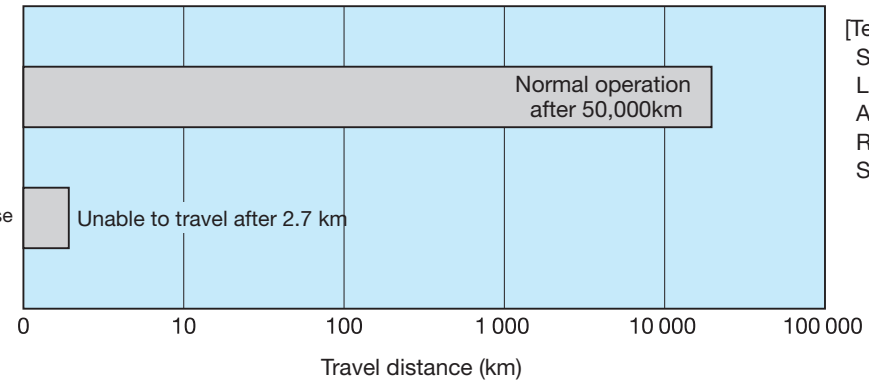

[Test conditions]
Screw shaft diameter ϕ15 mm
Lead 20 mm
Axial clearance 0.005 mm or less
Rotational speed 3 000 min^{-1}
Stroke 400 mm

◆ Guide to Model Numbers

GG	15	20	AS	—	B	A	S	R	—	Overall Screw Shaft Length	×	Thread Length	—	C5	F

◆ Compatible Series and Sizes

Nominal Diameter	Lead	LUBSEAL™ Compatible Series				
		FE/FG	GE/GG	GP	GY/GW	AD/AH
10	10	○				
12	10	○				
	20	○				
15	5	○	○	○	○	
	10	○	○		○	
	15		○			
	20	○	○		○	
16	5					○
	10					○
	16					○
	20					○
20	5		○	○	○	○
	10	○	○		○	○
	20	○	○		○	○
25	5	○	○		○	○
	10	○	○		○	○
	20		○			
	25	○	○		○	○

*Cannot be mounted on square nuts in the GY/GW Series.

⚠ Usage Precautions

(Note 1) LUBSEAL™ contains oil with the same composition as the grease inside the nut. Please contact us for information on other types of grease.
(Note 2) Please contact us about mounting LUBSEAL™ on ball screws from series other than those listed above, or on surface treated specification products.
(Note 3) The maximum specification temperature is 50°C. Please contact us for information about usage in environments at or above 50°C.

High Accuracy/High Rigidity Ball Screw Actuators / SG, SE, SC series

KURODA ball screw actuators are compact single-axis units consisting of a ball screw and a linear guide.
With a slide block set in a U-shaped guide rail, they feature both a low-profile cross-section and a compact shape, allowing a considerably reduced footprint compared with conventional table mechanisms.
Although the U-shaped guide rail allows a compact shape, it still provides high rigidity against both bending moment and deflection, allowing cantilever use as well.
The linear guide uses a groove with a Gothic arch shape and a four-point contact structure to deliver both high accuracy and high rigidity.
We offer a range of product series to suit various needs, such as the SG Series for high accuracy, the SE Series for high rigidity, and the fully covered SC Series for significantly improved particle generation prevention performance.
We also offer a range of options, such as products with motor mounting part shapes suited to various motors, products with top surface covers for particle generation prevention, sensors, and lubrication units.
We also manufacture products to order, such as products designed with guide rail intermediate strokes or with long rails, as well as products suitable for clean environments. Please feel free to contact KURODA for details.

◆ Ball Screw Actuator Feature Comparison

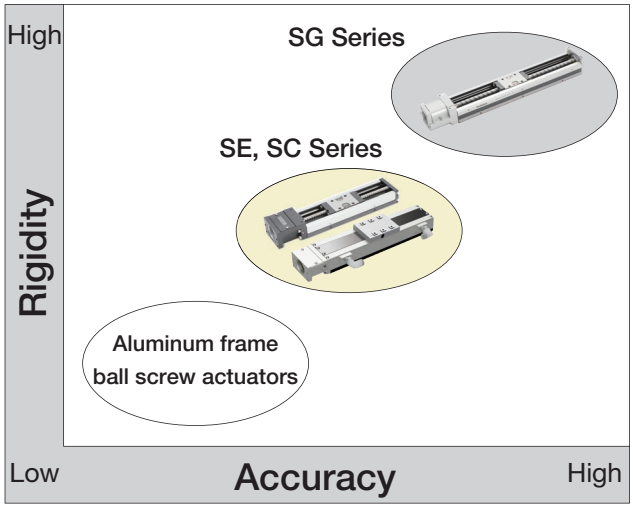

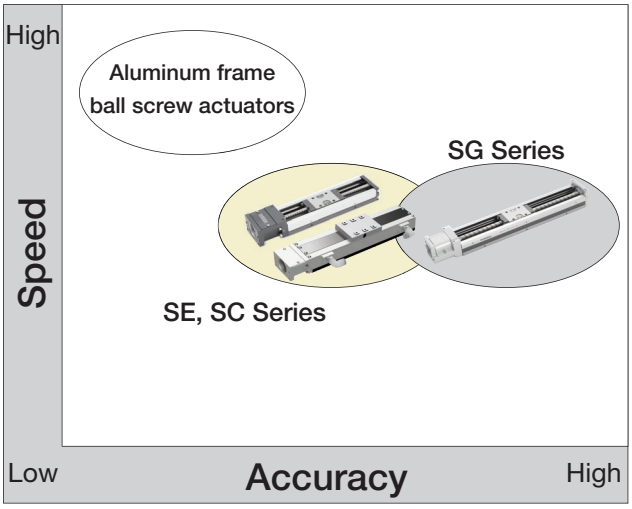

◆ High Accuracy Type SG Series ◆ High Rigidity Type SE Series ◆ Fully Covered Type SC Series

◆ Series Table

Model		SG Series						SE Series				SC Series		
		SG20	SG26	SG33	SG3320	SG46	SG55	SE15	SE23	SE30	SE45	SC23	SC30	SC45
Performance Code (Note 1)		P: Repeated positioning accuracy ±1 μm H: Repeated positioning accuracy ±3 μm						H: Repeated positioning accuracy ±3 μm U: Repeated positioning accuracy ±5 μm W: Repeated positioning accuracy ±10 μm						
Shaft Diameter		6	8	10	12	15	20	6	8	10	15	8	10	15
Lead	1	◎						◎						
	2		◎	●				◎	◎	●		◎	●	
	4									◎			◎	
	5	◎	◎	◎		●	●		◎	◎	◎	◎	◎	◎
	6									◎			◎	
	8								●			●		
	10			◎		◎	●			◎	◎		◎	◎
	20				◎	◎	◎			◎	◎		◎	◎
Standard Guide Rail Length		100 to 200	150 to 300	150 to 600		340 to 1240	980 to 1380	100 to 200	150 to 300	150 to 750	340 to 940	150 to 300	150 to 750	540 to 940
Slide Block Type		A B	A B	A B C D	A B	A B C D	A B	A B	A B	A B	A B C D	A	A	A

◎Standard product ●Order made product
A: One long block included B: Two long blocks included C: One short block included D: Two short blocks included
(Note 1) The performance figures above are examples representing the repeated positioning accuracy at various accuracies. Actual values may vary depending on optional specifications or usage method.
Refer to the ball screw actuator General Catalog for details.

High Accuracy/High Rigidity Ball Screw Actuators

◆ SG/SE Appearance

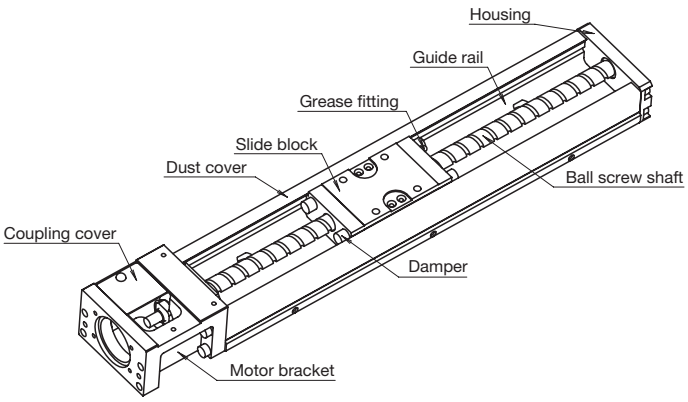

◆ SC Appearance

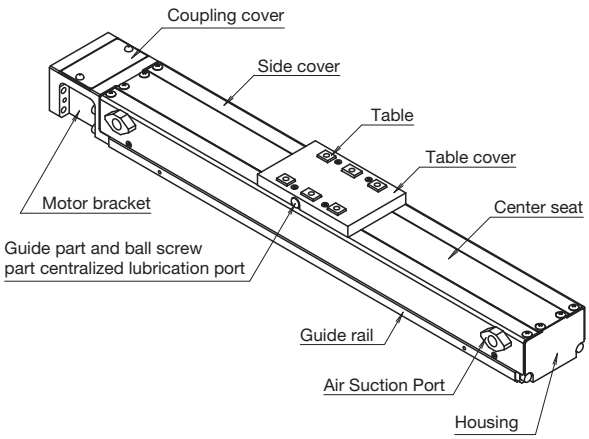

◆ Guide to Model Numbers

Model	Lead	Slide block		Guide rail length	Performance code		Motor mounting part shape	Cover shape	Sensor		Surface treatment	Grease		Dowel pin hole
SG33	10	A	-	500	P	-	A1	C	C	-	N	N	-	PS
(1)	(2)	(3)		(4)	(5)		(6)	(7)	(8)		(9)	(10)		(11)
Product model							Option model							

(1) This indicates the ball screw actuator model.

(2) This indicates the ball screw lead.

(3) This indicates the slide block type and the number assembled.

(4) This indicates the guide rail length.

(5) This indicates the performance of the ball screw actuator, such as positioning accuracy and travel parallelism.

(6) This indicates the motor mounting part shape.

(7) This indicates the cover shape.

(8) This indicates sensor presence/absence and type.

(9) This indicates whether the guide rail and ball screw have been surface treated.

(10) This indicates the type of grease used on the ball screw actuator slide block part and ball screw part.

(11) This indicates dowel pin hole presence/absence.

◆ Option Compatibility Table

Compatibility Category	Item		SG Series					SE Series				SC Series		
			SG20	SG26	SG33	SG46	SG55	SE15	SE23	SE30	SE45	SC23	SC30	SC45
Options	Motor Mounting Part Shape	Motor Bracket	○	○	○	○	○	○	○	○	○	○	○	○
		Intermediate Flange	○	○	○	○	○	○	○	○	○	○	○	○
		R0 Type/RN Type Bracket (Note 1)	○	○	○	○	○	-	-	○	○	-	○	○
		Parallel Motor Mount Unit	-	-	○	○	-	-	-	○	○	-	○	○
	Cover Type	No Top Surface Cover	○	○	○	○	○	○	○	○	○	-	-	-
		With Top Surface Cover	○	○	○	○	○	○	○	○	○	-	-	-
		Fully Covered Standard Specification (Note 2)	-	-	-	-	-	-	-	-	-	○	○	○
		Fully Covered with Grease Fitting (Note 2)	-	-	-	-	-	-	-	-	-	○	○	○
		Fully Covered with Wiper (Note 2)	-	-	-	-	-	-	-	-	-	○	○	○
		Fully Covered with Grease Fitting/Wiper (Note 2)	-	-	-	-	-	-	-	-	-	○	○	○
	Sensors	Photo Micro Sensor	○	○	○	○	○	-	○	○	○	○	○	○
		Proximity Sensor	○	○	○	○	○	○	○	○	○	○	○	○
	Surface Treatment (Note 3)		○	○	○	○	○	○	○	○	○	○	○	○
	Low Particle Generating Grease		○	○	○	○	○	○	○	○	○	○	○	○
	Dowel Pin Hole		○	○	○	○	○	-	○	○	○	-	-	-
	Lubrication Unit LUBSEAL™ (Note 4)		-	-	-	-	-	-	○	○	○	○	○	○

(Note 1) R0 type brackets are for the SG Series, while RN type brackets are for the SE Series and SC Series.
(Note 2) Fully covered specifications with wiper and with grease fitting are for the SC Series only.
(Note 3) Surface treatment here indicates anti-rust black oxide film treatment (film thickness 1 to 2 μm). Please contact us for information on other types of surface treatment.
(Note 4) LUBSEAL™ is mounted on both ends of the slide block, so it may not be compatible with some guide rail lengths.

High Accuracy/High Rigidity Ball Screw Actuators

Ball Screw Actuator Lubrication Unit LUBSEAL™

SE23/SE30/SE45
SC23/SC30/SC45

The “LUBSEAL” is a lubrication unit that is fitted in contact with the shaft thread and guide rail and supplies a proper amount of lubricant. Designed to maximize ball screw performance without sacrificing shaft length, “LUBSEAL” lubrication units prolong the period of maintenance-free operation with no loss in range of motion. This standard feature is ideal for semiconductor and LCD manufacturing and inspection equipment, food manufacturing equipment, medical equipment, machine tools, and automobile production equipment.

◆ Features

- Compact and clean-lined.
- Significantly extends maintenance periods.
- Provides reliable lubrication.
- Can be added as an option.
- Non-polluting.

◆ Structure

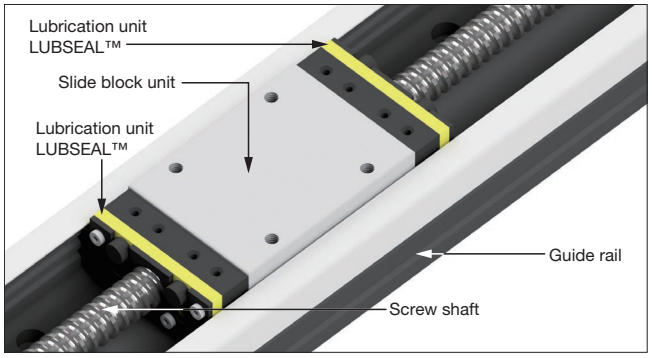

*The model image above is colored to show the LUBSEAL™ mounting position.

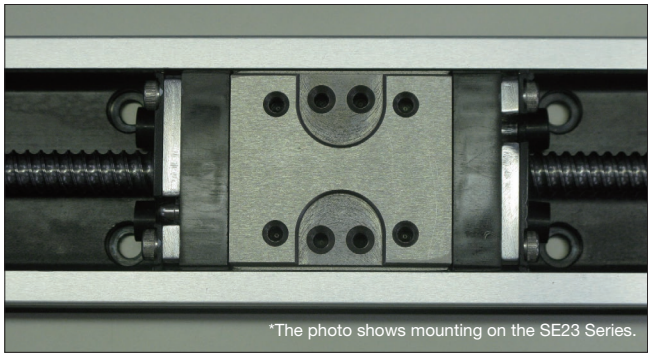

◆ Performance Data

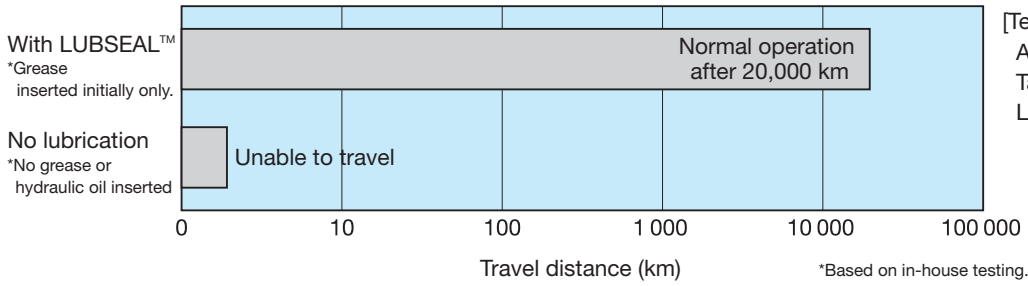

[Test conditions]
Actuator size: SE3010A
Table speed: 800 mm/s
Load weight: 30 N in radial direction

*Based on in-house testing.

◆ Lineup

Series	Model	Lead	Slide Block Type	Compatible Guide Rail Length (Note 1)
SE	SE23	2, 5	Long block	200 to 300
	SE30	4, 5, 10		200 to 750
	SE45	5, 10, 20	Long block, short block	340 to 940
SC	SC23	2, 5	Long block	200 to 300
	SC30	4, 5, 10		200 to 750
	SC30	5, 10, 20		540 to 940

(Note 1) LUBSEAL is mounted on both ends of the slide block, so it is compatible only with certain guide rail lengths.

◆ Guide to Model Numbers

- SE Series

	Model	Lead	Slide block		Guide rail length	Performance code		Motor mounting part shape	Cover shape	Sensor		Surface treatment	Grease		Dowel pin hole
Example	SE30	10	E	-	500	W	-	A0	C	C	-	N	N	-	PS

E: One long block included / F: Two long blocks included / G: One short block included / H: Two short blocks included

- SC Series

	Model	Lead	Slide block		Guide rail length	Performance code		Motor mounting part shape	Cover shape	Sensor		Surface treatment	Grease
Example	SC30	10	E	-	500	W	-	A0	N	C	-	N	N

E: One long block included

◆ Please contact Kuroda sales for details on maximum and minimum stroke.

Support Units / BUK, BUM, BUT

- **Suitable for ball screws with shaft diameter from ϕ 6 to ϕ 32**
- **Extremely high height accuracy**
- **Angular bearing preload adjusted**

  Bearing combinations are front surface aligned (DF). Back surface aligned (DB) is also available for applications requiring rigidity. Please contact us for details.
- **Surface treatment and special grease also supported**

Guide to Model Numbers

BUK - 10F
(1) (2)(3)

(1) Series
BUK: Square support unit
BUM: Round support unit
BUT: Machine tool support unit
(2) Bearing mounting part diameter (mm)
(3) Combination
F: Fixed side unit only
S: Supported side unit only
T: Outer diameter support unit only
No code: Fixed side unit + supported side bearing

BUK Series			BUM Series			BUT Series
Fixed Side Support Units	Supported Side Units	Outer Diameter Support Units	Fixed Side Support Units + Supported Side Bearings	Fixed Side Support Units	Supported Side Units	Fixed Side Support Units
BUK-6	-	-	BUM-6	BUM-6F	-	-
BUK-8F	BUK-6S	-	BUM-8	BUM-8F	BUM-6S	-
BUK-10F	BUK-8S	BUK-12T	BUM-10	BUM-10F	BUM-8S	-
BUK-12F	BUK-10S	BUK-15T	BUM-12	BUM-12F	BUM-10S	-
BUK-15F	BUK-15S	-	BUM-15	BUM-15F	BUM-15S	-
BUK-20F	BUK-20S	-	BUM-20	BUM-20F	BUM-20S	BUT-20
BUK-25F	BUK-25S	-	BUM-25	BUM-25F	-	BUT-25
-	-	-	-	-	-	BUT-30
-	-	-	-	-	-	BUT-35
-	-	-	-	-	-	BUT-40

KURODA Low Particle Generating Grease Series

Meeting particle prevention needs for ball screws and ball screw actuators used in semiconductor manufacturing machines, LCD-related equipment, medical-related devices and more. The KURODA low particle grease series of products provides superior low particle performance, stable torque characteristics, excellent lubrication performance, and advanced rust protection.

*Can be used set to your current grease gun.
(Be sure to use a JIS B 9808-1991 compliant grease gun.)

KURODA S-Grease

Ideal for low stroke operation requirements.

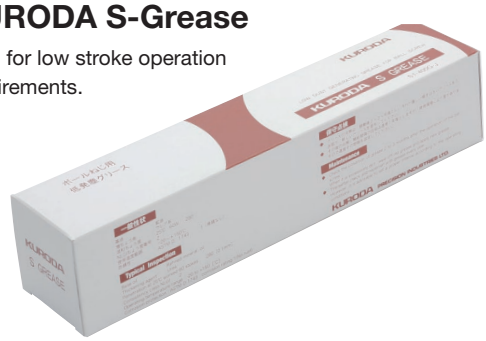

Appearance	Yellow-white
Thickener	Urea
Base Oil	Mineral oil
Consistency	280(No.2)
Operating Temperature Range	-20 to +150°C

◇Models
S1-080G-J (80 g bellows container)
S1-400G-J (400 g bellows container)

CAT.NO.KB1013-04

KURODA PRECISION INDUSTRIES LTD.

https://www.kuroda-precision.co.jp

HEAD OFFICE 580-16, Horikawa-cho, Saiwai-ku, Kawasaki, Kanagawa 212-8560, Japan
Tel: +81-(0)44-555-3805 Fax: +81-(0)44-555-1479
Email: ovs_dpt@kuroda-precision.co.jp

KURODA JENA TEC INC.
3939 Royal Drive Suite 143 Kennesaw, GA 30144 U.S.A.
Tel: 1-770-926-6705 Fax: 1-770-926-6724
Email: sales@kurodajenatec.com

JENAER GEWINDETECHNIK GmbH
Victor-Goerttler-Str.3, 07745 Jena, Germany
Tel: +49-(0)3641-68980 Fax: +49-(0)3641-689860
Email: info@jena-tec.de

KURODA PRECISION INDUSTRIES KOREA LTD.
202F 110, Ls-Ro 144 Beon-Gil, Dongan-gu,
Anyang-si, Gyeonggi-do, 14083, Korea
Tel: +82-31-451-4920 Fax: +82-31-451-4921
Email: mail@kuroda.kr

KURODA JENA TEC TRADING PINGHU CO., LTD.
383, Xingye Road, Pinghu Economic Development Zone, Pinghu Zhejiang,
P.R. China, P.C: 314200
Tel: +86-573-85010786 Fax: +86-573-85014123
Email: kpp@kuroda-pinghu.com

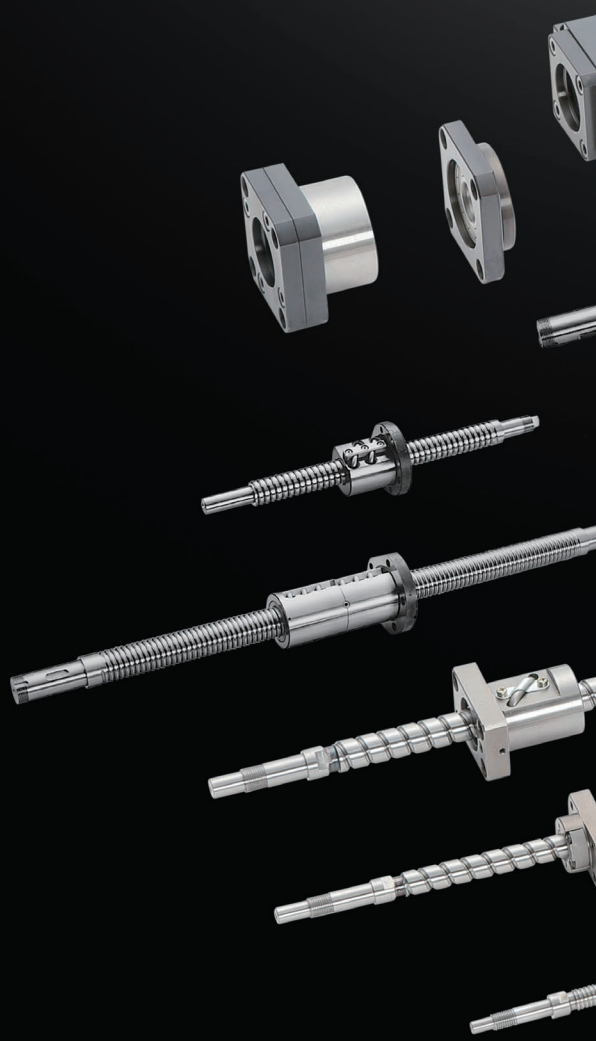

Ball Screw Selection Software

https://www.kuroda-precision.co.jp/bs-selection/index_page2.php?lang=en

You can select the best ball screws simply in 5 easy steps.

Actuator Selection Software

https://www.kuroda-precision.co.jp/actuator/index.php?lang=en

You can select the best ball screw actuators simply in 3 easy steps.

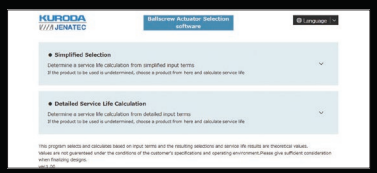

Internet Support Service

https://www.kuroda-precision.com/

KURODA provides product information and CAD data online which can be downloaded. In addition, please note that you need to register on the PART community to use 3D-CAD data.

* The contents herein are information as of the end of Sept. 2023.
The appearance or specifications of products may be changed without prior notice in order to respond to technical progress and improvements.

Printed in Japan 2023.10(A)